Lake Geneva Utility Commission

Dennis Lyon, President
Josh Gajewski, Utility Director
Jeff Ecklund, Water Superintendent
Ken Bauman, Wastewater Superintendent

361 W. Main Street P.O. Box 187 Lake Geneva, WI 53147 Phone (262) 248-2311
www.lgutilitycommission.com

Regular Lake Geneva Utility Commission Meeting
Monday January 17, 2022 4:00 PM
Council Chambers (Main Level), City Hall – 626 Geneva Street

CITY HALL WILL BE OPEN TO THE PUBLIC DURING ALL MEETINGS. MEETINGS WILL BE HELD VIRTUALLY AS WELL AS IN PERSON. IF YOU WISH TO LISTEN OR WATCH THE MEETING YOU MAY DO SO BY USING THE FOLLOWING:

1. Links to the Lake Geneva Utility Commission's live video stream can be found at www.cityoflakegeneva.com/video
2. Television: Watch live broadcast of the meeting on Spectrum Cable Channel 25
3. Listen to audio via phone: (602) 333-2017 (Long distance rates may apply) (888) 204-5987 (Toll Free) **Access Code:** 9746153

Agenda

1. Call Meeting to Order
2. Roll Call
3. Comments from the public as allowed by Wis. Statutes §19.84 (2), limited to items on this agenda except for public hearing items. Comments will be limited to 5 minutes.
4. Approve Utility Commission Minutes from December 20, 2021 and December 30, 2021 as prepared and distributed
5. Acknowledgement of Correspondence
6. Approval of December 2021 Financials
7. Approval of the December 2021 Bills
8. Directors Report
9. Discussion/Action on payment to Lane Tank Co., for interior coating work completed on Reservoir #3 – Project 21-03.
10. Discussion/Action on water and sanitary sewer service provided to the Oak Terrace area.
11. Discussion/Action on application for sewer credit filed by Raymond and Colleen Egan – 1024 S. Lakeshore Dr.
12. Discussion/Action on the purchase of replacement polymer feed system for dewatering process.
13. Discussion/Action on proposal by T-Mobile/Sprint for alterations to facilities located at the Host Dr. Tower.
14. Discussion/Action on US Cellular preliminary proposal to relocate equipment to a monopole located at the Center St. Tower.

15. Discussion/Action on Covenant Harbor PIP Amendment Application, razing of Triplets buildings and construction of Twins buildings.

16. Adjourn

Lake Geneva Utility Commission Minutes
Lake Geneva Utility Commission Meeting
Monday December 20, 2021, 4:00pm
Council Chambers, City Hall – 626 Geneva St

THIS MEETING WAS HELD BOTH VIRTUALLY AND IN PERSON

Call Meeting to Order – President Lyon called the meeting to order at 4pm

Roll Call – Lyon, Klein, Stanczak, Hedlund, Binn, & Flower. Nord appeared via Zoom.

Staff in Attendance – Gajewski. Busch arrived at 4:05pm.

Comments from the public as allowed by Wis. Statutes §19.84 (2), limited to items on this agenda except for public hearing items. Comments will be limited to 5 minutes.
None

Approve Utility Commission minutes from November 15, 2021, and December 8, 2021, as prepared & distributed
Klein/Binn motion to approve. Passed unanimously.

Acknowledgement of correspondence
None

Approval of the November 2021 Financials
Gajewski gave an update on the revenues for 2021 and said fourth quarter bills will be mailed and booked to revenues next week.
Hedlund/Stanczak motion to approve. Passed unanimously.

Approval of the November 2021 Bills
Binn/Hedlund motion to approve. Passed unanimously.

Directors Report
Gajewski went over the submitted Director's Report. He also reported that we had received a pay request from Genesis Excavators for the Warren St/Main St watermain project that did not make it onto the agenda. The payment request requires a special meeting to be approved since there were some changes to the scope of work and the contractor is requesting payment to close out the year. Discussion on availability followed and Gajewski will follow up with the Commission to schedule a time and date.
Flower/Klein motion to approve the Directors Report. Passed unanimously.

Discussion/Action on revised job description for Billing Clerk position
Gajewski explained that the Billing Clerk job description was written with the last recruitment cycle for the position in 2010. With the wage and compensation study coming up, it was felt to be a suitable time to update the job description and match the format of the other job descriptions we have.
Hedlund/Binn motion to approve the revised billing clerk job description. Passed unanimously.

Discussion/Action on Pay Request #2 by LC United Painting Co. Inc. for work completed on the Dodge Tower Raising and Coating Project – Bid #2 for the amount of $2,000.00
Gajewski reported that the last part of the work for this project has now been completed. There was a 12-foot section of pipe in the pit of the tower that had not been painted mainly due to the desire to get

the tower back in service and the weather conditions at the time. LC United were ultimately able to use a more flexible product that could better deal with condensation and the atmosphere the pipe is housed in. This is the final payment to close out this project and has been recommended by MSA Professional Services to be approved.
Hedlund/Flower motion to approve payment of $2,000 to LC United Painting Co Inc. Passed unanimously.

Discussion/Action on acceptance of water and sanitary improvements – Symphony Bay Phase 2
Gajewski reported that the water & sanitary improvements were installed in 2018 and the final layer of asphalt has been laid. Storm sewer and gutter are either in the process of, or have already been, approved for acceptance by the City. The water and sanitary improvements will be booked as contributed assets for 2021. Kapur have provided a list for inventory and are recommending the acceptance at this time.
Flower/Binn motion to approve the Symphony Bay Phase 2 water & sewer improvements. Passed unanimously.

Lyon/Flower motion to go into closed session pursuant to Wis. Stat. 19.85 (1)(c) considering employment, promotion, compensation or performance evaluation data of any public employee over which the governmental body has jurisdiction or exercises responsibility, regarding a) annual evaluation of the Utility Director and b) Lead Wastewater Operator compensation; and pursuant to Wis. Stat. 19.85(1)(g) conferring with legal counsel for the governmental body who is rendering oral or written advice concerning strategy to be adopted by the body with respect to litigation in which it is or is likely to become involved regarding Kukla water service claim

The Commission convened into closed session on a roll call vote at 4:25pm.

Lyon/Hedlund motion to return to open session pursuant to Wisc. Stat. 19.85(2) and take action on any items discussed in closed session

The Commission reconvened into open session on a roll call vote at 5:02pm and took action as follows:

a) Hedlund/Flower motion to proceed with the Utility Director's evaluation as discussed in closed session. Passed unanimously.
b) Hedlund/Flower motion to proceed as discussed in closed session with regard to Lead Wastewater Operator compensation. Passed unanimously.
c) Hedlund/Stanczak motion to deny the Kukla water service claim as presented. Passed 6-1 with Klein voting no.

Adjourn
Hedlund/Stanczak motion to adjourn at 5:04pm. Passed unanimously.

/s/ Jo Busch, Office Manager

THESE MINUTES ARE NOT OFFICIAL UNTIL APPROVED BY THE LAKE GENEVA UTILITY COMMISSION

Lake Geneva Utility Commission Minutes
Lake Geneva Utility Commission Meeting
Monday December 30, 2021, 4:00pm
Council Chambers, City Hall – 626 Geneva St

THIS MEETING WAS HELD BOTH VIRTUALLY AND IN PERSON

Call Meeting to Order – President Lyon called the meeting to order at 4pm

Roll Call – Lyon, Flower, Binn, & Nord present.

Staff in Attendance – Gajewski

Comments from the public as allowed by Wis. Statutes §19.84 (2), limited to items on this agenda except for public hearing items. Comments will be limited to 5 minutes.
None

Pay Request #1 (Final) filed by Genesis Excavators, Inc. for work completed on the Warren St. and Wells St. Watermain Project for the amount of $166,044.10.
Gajewski reviewed the memo provided to the Commissioners, outlining where project quantities varied from the bid amount and what the additional costs were associated with the changes. He also mentioned that retainage was not being held and that anything needing further attention by the Contractor would be addressed as a warranty item.
Binn/Flower motion to approve Pay Request #1 by Genesis Excavators, Inc. in an amount of $166,044.10. Passed 4-0.

Adjourn
Flower/Binn motion to adjourn at 4:13pm. Passed 4-0.

/s/ Josh Gajewski, Utility Director

THESE MINUTES ARE NOT OFFICIAL UNTIL APPROVED BY THE LAKE GENEVA UTILITY COMMISSION

LAKE GENEVA UTILITY COMMISSION

BUDGET COMPARISON THRU: 12 / 2021

FUND 61 - WASTEWATER UTILITY

REVENUES	Current Month	YTD	2021 Budgeted	Variance (YTD vs Budget)	YTD % of 2021 Budget *100.0%*	YTD Look Back 2020	YTD Look Back 5 Year Avg.
INTEREST EARNED	380	2,982	11,800	-8,818	25.27%	12,474	23,241
CUSTOMER SALES	417,692	2,070,016	1,994,650	75,366	103.78%	1,980,142	1,667,559
OTHER REVENUE	474	13,015	664,250	-651,235	1.96%	10,368	27,991
CAPITAL CONTRIBUTIONS	24,245	218,205	139,875	78,330	156.00%	169,715	161,398
TOTAL REVENUES	**442,790**	**2,304,217**	**2,810,575**	**-506,358**	**81.98%**	**2,172,699**	**1,880,189**
EXPENSES							
TOTAL OUTSIDE SERVICES	33,171	255,050	350,650	-95,600	72.74%	300,298	287,255
TOTAL OPERATING EXPENSES	4,312	36,165	43,100	-6,935	83.91%	30,726	29,251
TOTAL INSURANCE	0	20,456	30,910	-10,454	66.18%	27,162	23,692
TOTAL SALARY & BENEFITS	49,983	511,121	602,203	-91,082	84.88%	502,061	567,713
TOTAL LAB SUPPLIES	589	18,144	21,100	-2,956	85.99%	13,461	16,430
TOTAL MISCELLANEOUS EXPENSE	334	927	1,250	-323	74.18%	320	1,051
TOTAL MAINTENANCE	17,535	309,427	404,600	-95,173	76.48%	136,681	214,763
TOTAL OPERATION & MAINTENANCE EXPENSES	**105,924**	**1,151,291**	**1,453,813**	**-302,522**	**79.19%**	**1,010,708**	**1,140,156**
REVENUES OVER O&M EXPENSES	**336,866**	**1,152,927**	**1,356,762**	**-203,835**		**1,161,991**	**740,034**
TOTAL CAPITAL OUTLAY	26,426	153,587	972,500	-818,913	15.79%	59,277	326,633
REVENUES OVER TOTAL EXPENSES	**310,440**	**999,340**	**384,262**	**615,078**		**1,102,714**	**413,400**
TOTAL CASH TRANSFERS	0	971,580	378,575	593,005	256.64%	1,250,805	339,637
ANNUAL CASH BALANCE	**310,440**	**27,760**	**5,687**	**22,073**		**-148,091**	**73,763**
TOTAL DEPRECIATION	0	0	0	0	0.00%	656,820	616,275

FUND CASH AND INVESTMENT SUMMARY	Opening Balance	Period Activity	Ending Balance
Wastewater Utility Fund Cash	851,979	-85,440	766,539
LGIP #10 - Capital Project Fund	1,820,061	93	1,820,153
LGIP #11 - Debt Service Fund	0	0	0
LGIP #12 - Impact Fee Fund	1,004,703	51	1,004,754
LGIP #13 - Equipment Replacement Fund	1,152,424	59	1,152,482
TOTAL WASTEWATER CASH AND INVESTMENT	**4,829,166**	**-85,238**	**4,743,929**

LAKE GENEVA UTILITY COMMISSION

BUDGET COMPARISON THRU: 12 / 2021

FUND 62 - WATER UTILITY

REVENUES	Current Month	YTD	2021 Budgeted	Variance (YTD vs Budget)	YTD % of 2021 Budget *100.0%*	YTD Look Back 2020	YTD Look Back 5 Year Avg.
INTEREST EARNED	427	1,878	5,400	-3,522	34.78%	7,197	10,147
CUSTOMER SALES	400,347	1,857,465	1,724,144	133,321	107.73%	1,743,488	1,664,238
OTHER REVENUE	3,882	282,784	672,973	-390,189	42.02%	267,899	263,430
CAPITAL CONTRIBUTIONS	21,970	572,730	126,750	445,980	451.86%	155,491	148,339
TOTAL REVENUES	**426,626**	**2,714,857**	**2,529,267**	**185,590**	**107.34%**	**2,174,075**	**2,086,155**
EXPENSES							
TOTAL SOURCE OF SUPPLY - OPERATION	4,514	54,724	62,200	-7,476	87.98%	53,566	59,173
TOTAL SOURCE OF SUPPLY - MAINTENANCE	145	11,587	76,526	-64,939	15.14%	6,656	46,667
TOTAL PUMPING EXPENSE - OPERATION	5,397	66,419	77,074	-10,655	86.18%	71,475	76,571
TOTAL PUMPING EXPENSE - MAINTENANCE	236	51,316	103,781	-52,465	49.45%	6,482	17,569
TOTAL WATER TREATMENT - OPERATION	5,337	78,498	102,600	-24,102	76.51%	108,362	92,965
TOTAL WATER TREATMENT - MAINTENANCE	4,009	148,341	106,164	42,177	139.73%	55,367	99,342
TOTAL TRANS. & DISTRIBUTION - OPERATION	2,738	43,309	44,596	-1,287	97.11%	32,557	34,170
TOTAL TRANS. & DISTRIBUTION - MAINTENANCE	28,735	196,080	298,460	-102,380	65.70%	551,184	311,292
TOTAL CUSTOMER ACCOUNTS	5,735	64,426	66,525	-2,099	96.84%	67,750	65,612
TOTAL ADMIN & GENERAL OPERATIONS	34,270	359,018	429,009	-69,991	83.69%	421,906	461,547
TOTAL OTHER EXPENSES	10,640	285,640	325,000	-39,360	87.89%	280,150	298,983
TOTAL OPERATION & MAINTENANCE EXPENSES	**101,756**	**1,359,359**	**1,691,935**	**-332,576**	**80.34%**	**1,655,455**	**1,563,890**
REVENUES OVER O&M EXPENSES	**324,870**	**1,355,498**	**837,332**	**518,166**		**518,620**	**522,265**
TOTAL CAPITAL OUTLAY	257,879	462,426	645,500	-183,074	71.64%	555,311	424,666
REVENUES OVER TOTAL EXPENSES	**66,991**	**893,072**	**191,832**	**701,240**		**-36,691**	**97,599**
TOTAL CASH TRANSFERS	0	1,065,480	186,400	879,080	571.61%	96,330	-24,562
ANNUAL CASH BALANCE	**66,991**	**-172,408**	**5,432**	**-177,840**		**-133,021**	**122,161**
TOTAL DEPRECIATION	0	0	0	0	0%	413,387	411,312

FUND CASH AND INVESTMENT SUMMARY	Opening Balance	Period Activity	Ending Balance
Water Utility Fund Cash	702,986	-131,901	571,084
LGIP #1 - Capital Project Fund	891,973	375,061	1,267,034
LGIP #2 - Impact Fee Fund	771,235	-374,976	396,259
LGIP #3 - Equipment Replacement Fund	530,418	27	530,445
TOTAL WATER FUND CASH AND INVESTMENT	**2,896,612**	**-131,790**	**2,764,822**

Report Criteria:
Detail report.
Invoices with totals above $5000.00 included.
Paid and unpaid invoices included.
Invoice Detail.GL account (2 Characters) = "61","62"

Invoice Number	Invoice Date	Description	GL Account and Title		Net Invoice Amount
61					
ALLIANT ENERGY					
280954000021	01/03/2022	HASKINS ST SEWER PLANT	61-00-00-52520	UTILTITY-ELECTRICITY-PLANT	13,352.05
Total ALLIANT ENERGY:					13,352.05
CIVIC SYSTEMS LLC					
CVC21372	12/17/2021	CIVIC SUPPORT FEES-JAN-JUN	61-00-00-52660	OUTSIDE SERVICES EMPLOYED	2,191.25
Total CIVIC SYSTEMS LLC:					2,191.25
Total 61:					15,543.30
62					
GENESIS EXCAVATORS INC					
PAY APP 1-FIN	10/25/2021	WARREN ST & WELLS ST WATE	62-00-00-10700	CONSTRUCTION WORK IN PROCESS	166,044.10
Total GENESIS EXCAVATORS INC:					166,044.10
LANE TANK CO. INC					
LANETANK122	12/22/2021	RESERVOIR #3 PAINTING/REHA	62-00-00-10700	CONSTRUCTION WORK IN PROCESS	37,450.00
Total LANE TANK CO. INC:					37,450.00
ASPHALT CONTRACTORS INC					
21920	12/17/2021	ASPHALT PATCHING & MAIN RE	62-00-00-67300	MAINT OF MAINS & VALVES	4,033.00
Total ASPHALT CONTRACTORS INC:					4,033.00
SCHMITZ READY MIX INC					
0967083-IN	12/29/2021	SLURRY BACKFILL MAIN BREA	62-00-00-67300	MAINT OF MAINS & VALVES	6,450.00
Total SCHMITZ READY MIX INC:					6,450.00
ASPHALT CONTRACTORS INC					
21920	12/17/2021	ASPHALT PATCHING & MAIN RE	62-00-00-67500	MAINT SERVICES & CURB BOX	4,033.00
Total ASPHALT CONTRACTORS INC:					4,033.00
ODLING CONSTRUCTION INC					
0921-73	09/15/2021	201 PRAIRIEWIND SERVICE RE	62-00-00-67500	MAINT SERVICES & CURB BOX	5,043.17
Total ODLING CONSTRUCTION INC:					5,043.17
CIVIC SYSTEMS LLC					
CVC21372	12/17/2021	CIVIC SUPPORT FEES-JAN-JUN	62-00-00-92300	OUTSIDE SERVICES EMPLOYED	2,191.25
Total CIVIC SYSTEMS LLC:					2,191.25
Total 62:					225,244.52

Invoice Number	Invoice Date	Description	GL Account and Title	Net Invoice Amount
Grand Totals:				240,787.82

Dated: _____

Mayor: _____

City Council: _____

_____

_____

_____

_____

_____

City Recorder: _____

Report Criteria:
Detail report.
Invoices with totals above $5000.00 included.
Paid and unpaid invoices included.
Invoice Detail.GL account (2 Characters) = "61","62"

Report Criteria:
Detail report.
Invoices with totals above $0.00 included.
Paid and unpaid invoices included.
Invoice Detail.GL account (2 Characters) = "61","62"

Invoice Number	Invoice Date	Description	GL Account and Title		Net Invoice Amount
61					
NORTHERN LAKE SERVICE INC					
411774	12/20/2021	WEEKLY NITROGEN TESTING	61-00-00-52100	LABORATORY SERVICES	229.20
411933	12/21/2021	WEEKLY NITROGEN TESTING &	61-00-00-52100	LABORATORY SERVICES	247.70
412353	12/29/2021	WEEKLY NITROGEN TESTING	61-00-00-52100	LABORATORY SERVICES	229.20
412556	01/11/2022	WEEKLY NITROGEN TESTING	61-00-00-52100	LABORATORY SERVICES	229.20
Total NORTHERN LAKE SERVICE INC:					935.30
WE ENERGIES					
071152724500	12/14/2021	LAGRANGE DR LIFT STN	61-00-00-52505	UTILITY-GAS-COLLECTION SYSTEM	23.84
071277607500	12/14/2021	BIG FOOT LIFT STATION	61-00-00-52505	UTILITY-GAS-COLLECTION SYSTEM	17.12
Total WE ENERGIES:					40.96
ALLIANT ENERGY					
143875000021	01/03/2022	191 HASKINS ST DEWATER BLD	61-00-00-52520	UTILTITY-ELECTRICITY-PLANT	317.97
280954000021	01/03/2022	HASKINS ST SEWER PLANT	61-00-00-52520	UTILTITY-ELECTRICITY-PLANT	13,352.05
507753000021	01/03/2022	361 W MAIN ST SIGN	61-00-00-52520	UTILTITY-ELECTRICITY-PLANT	38.75
974671000021	01/03/2022	361 MAIN ST HALLWAY	61-00-00-52520	UTILTITY-ELECTRICITY-PLANT	124.05
055361000021	01/03/2022	361 MAIN ST CC LIFT	61-00-00-52525	UTILTITY-ELECTRICITY-COLL SYS	72.62
141180000021	01/03/2022	LAGRANGE DR LIFT STN	61-00-00-52525	UTILTITY-ELECTRICITY-COLL SYS	152.63
277971000021	01/03/2022	MARIANE TER LIFT STN	61-00-00-52525	UTILTITY-ELECTRICITY-COLL SYS	38.59
307955000021	01/03/2022	MAXWELL ST LIFT STN	61-00-00-52525	UTILTITY-ELECTRICITY-COLL SYS	30.83
327113000021	01/03/2022	BAYVIEW DR LIFT STN	61-00-00-52525	UTILTITY-ELECTRICITY-COLL SYS	53.26
599411000021	01/03/2022	361 STATE ROAD 120 BIG FOOT	61-00-00-52525	UTILTITY-ELECTRICITY-COLL SYS	251.43
962961000022	01/03/2022	EDGEWOOD DR LIFT STN	61-00-00-52525	UTILTITY-ELECTRICITY-COLL SYS	154.83
Total ALLIANT ENERGY:					14,587.01
CIVIC SYSTEMS LLC					
CVC21372	12/17/2021	CIVIC SUPPORT FEES-JAN-JUN	61-00-00-52660	OUTSIDE SERVICES EMPLOYED	2,191.25
Total CIVIC SYSTEMS LLC:					2,191.25
VELOCITY					
2021053	12/31/2021	IT SUPPORT SERVICES-07/21/2	61-00-00-53050	COMPUTER EXPENSE	1,470.12
Total VELOCITY:					1,470.12
CAPITAL ONE					
511343595783	12/09/2021	PRINTER CARTRIDGE	61-00-00-53100	OFFICE SUPPLIES EXPENSE	45.53
Total CAPITAL ONE:					45.53
CHARTER COMMUNICATIONS					
010682412212	12/21/2021	INTERNET SVC-DEC	61-00-00-53100	OFFICE SUPPLIES EXPENSE	57.49
Total CHARTER COMMUNICATIONS:					57.49

Invoice Number	Invoice Date	Description	GL Account and Title	Net Invoice Amount
MARTIN GROUP				
1281666	12/20/2021	SERVICE CONTRACT/COPIES	61-00-00-53100 OFFICE SUPPLIES EXPENSE	102.32
Total MARTIN GROUP:				102.32
OFFICE DEPOT				
218570771001	01/10/2022	LTR SIZE POCKET FILES	61-00-00-53100 OFFICE SUPPLIES EXPENSE	15.95
218572442001	01/10/2022	PENS POCKET FILES PAPER DI	61-00-00-53100 OFFICE SUPPLIES EXPENSE	200.46
218572443001	01/08/2022	LABELS	61-00-00-53100 OFFICE SUPPLIES EXPENSE	60.55
Total OFFICE DEPOT:				276.96
AT&T				
262248865612	12/13/2021	DECEMBER TELEPHONE	61-00-00-53110 TELEPHONE EXPENSE	114.89
Total AT&T:				114.89
AT&T LONG DISTANCE				
RENOV	12/04/2021	262-248-2394 NOV	61-00-00-53110 TELEPHONE EXPENSE	.28
Total AT&T LONG DISTANCE:				.28
FIRST BANKCARD				
554328613582	12/24/2021	VONAGE PHONE SVC 12/23/202	61-00-00-53110 TELEPHONE EXPENSE	121.21
Total FIRST BANKCARD:				121.21
US CELLULAR				
0477613553	12/04/2021	WWTF MONTHLY PHONE BILL	61-00-00-53110 TELEPHONE EXPENSE	124.74
Total US CELLULAR:				124.74
PITNEY BOWES GLOBAL LEASE				
3315004084	12/29/2021	ACCOUNT 0010523476-PERSO	61-00-00-53120 POSTAGE	4.27
Total PITNEY BOWES GLOBAL LEASE:				4.27
DUNN LUMBER				
969990	12/16/2021	1/4" I/M 3/8" FNPT PLUG-SHOP	61-00-00-53500 OPERATIONS TOOLS & EQUIP	3.62
Total DUNN LUMBER:				3.62
HOME DEPOT CREDIT				
6026087	12/22/2021	SOCKET SETS, IMPACT SKT, W	61-00-00-53500 OPERATIONS TOOLS & EQUIP	358.34
Total HOME DEPOT CREDIT:				358.34
CINTAS CORP				
5088192382	12/17/2021	FIRST AID SUPPLIES	61-00-00-53900 FIRST AID & SAFETY SUPPLIES	40.91
Total CINTAS CORP:				40.91
FIRST BANKCARD				
053146113530	01/27/2021	HOLIDAY PARTY	61-00-00-53990 MISCELLANEOUS EXPENSE	54.00
053146113530	01/27/2021	POINTS REDEEMED-HOLIDAY P	61-00-00-53990 MISCELLANEOUS EXPENSE	50.00-

Invoice Number	Invoice Date	Description	GL Account and Title	Net Invoice Amount
Total FIRST BANKCARD:				4.00
CULLIGAN OF BURLINGTON				
500X02711709	12/31/2021	1/1/2022-6/30/2022 FILTER EQUI	61-00-00-64000 LABORATORY SUPPLIES	212.06
Total CULLIGAN OF BURLINGTON:				212.06
DUNN LUMBER				
969990	12/16/2021	ROPE & QUICK LINKS-SAMPLIN	61-00-00-64000 LABORATORY SUPPLIES	15.17
Total DUNN LUMBER:				15.17
CAPITAL ONE				
511343595783	12/09/2021	CLNR WIPES & GAIN LIQUID	61-00-00-65000 OTHER OPERATING SUPPLIES-KITCH	14.41
Total CAPITAL ONE:				14.41
ROTE OIL COMPANY				
581087	12/30/2021	SOLAR SALT-PLANT GROUNDS	61-00-00-65500 MAINT OF OTHER PLANT	294.00
Total ROTE OIL COMPANY:				294.00
JOHNSON, JEFFREY A				
JOHNSON123	12/31/2021	REIMBURSE WORK BOOTS	61-00-00-92600 EMPLOYEE BENEFITS	100.00
Total JOHNSON, JEFFREY A:				100.00
SECURIAN FINANCIAL GROUP				
UTL LIFE INS	01/11/2022	FEB LIFE INS 2022	61-00-00-92630 LIFE INSURANCE EXPENSE	7.14
Total SECURIAN FINANCIAL GROUP:				7.14
PFI FASHIONS				
381	12/28/2021	UNIFORMS-2021	61-00-00-92650 UNIFORM/CLOTHING EXPENSE	459.12
389	12/27/2021	UNIFORMS-2021	61-00-00-92650 UNIFORM/CLOTHING EXPENSE	143.24
Total PFI FASHIONS:				602.36
DUNN LUMBER				
984084	01/06/2022	WD-40 DEWATERING BLDG MAI	61-00-00-93507 MAINT-DEWATERING-B/PRESS BLDG	12.32
976174	12/23/2021	CORD FRAME-DIGESTER SAM	61-00-00-93602 MAINT-DIGESTERS EQUIP	2.83
Total DUNN LUMBER:				15.15
FIRST BANKCARD				
552635213510	12/16/2021	ORP PROBE PARTS-SENSORS,	61-00-00-93603 MAINT-PROCESS EQUIP	253.91
Total FIRST BANKCARD:				253.91
BUMPER TO BUMPER AUTO PARTS				
662-450976	12/17/2021	BELT-CAKE BARN EXHAUST FA	61-00-00-93607 MAINT-DEWATERING-B/PRESS EQUIP	20.39
Total BUMPER TO BUMPER AUTO PARTS:				20.39
DUNN LUMBER				
970949	12/17/2021	NUTS & BOLTS-CAKE BARN EX	61-00-00-93607 MAINT-DEWATERING-B/PRESS EQUIP	4.54

Invoice Number	Invoice Date	Description	GL Account and Title		Net Invoice Amount
976174	12/23/2021	PAINT PAIL, SCOOP-DE-WATERI	61-00-00-93607	MAINT-DEWATERING-B/PRESS EQUIP	9.58
965097	12/10/2021	PAN ZIPIT ANCHOR, TIRE WET	61-00-00-93700	MAINT-VEHICLES & EQUIP	23.49
980310	12/30/2021	ARMOR ALL PROTECTANT	61-00-00-93700	MAINT-VEHICLES & EQUIP	7.83
Total DUNN LUMBER:					45.44
ITU ABSORB TECH INC					
7837928	01/07/2022	SHOP RAGS	61-00-00-93700	MAINT-VEHICLES & EQUIP	31.55
Total ITU ABSORB TECH INC:					31.55
DIGGERS HOTLINE					
211239101	12/31/2021	BALANCE DUE DEC 2021 (115 E	61-00-00-93810	MAINT-MAINS	29.70
Total DIGGERS HOTLINE:					29.70
ALLIANT ENERGY					
252422000022	01/03/2022	E STATE ROAD 50 GATE	61-00-00-93820	MAINT-RECEIVING STATION	20.74
054885000021	01/03/2022	E STATE ROAD 50 SEEPAGE	61-00-00-93830	MAINT-SEEPAGE CELLS/POND	121.42
Total ALLIANT ENERGY:					142.16
SYSTEMS DESIGN					
21618	01/05/2022	IRRIGATION SHUTDOWN	61-00-00-93910	MAINTENANCE-OTHER	75.00
Total SYSTEMS DESIGN:					75.00
Total 61:					22,337.64
62					
GENESIS EXCAVATORS INC					
PAY APP 1-FIN	10/25/2021	WARREN ST & WELLS ST WATE	62-00-00-10700	CONSTRUCTION WORK IN PROCESS	166,044.10
Total GENESIS EXCAVATORS INC:					166,044.10
KAPUR & ASSOCIATES INC					
110938	12/22/2021	WARREN & WELLS CLOSEOUT-	62-00-00-10700	CONSTRUCTION WORK IN PROCESS	502.00
Total KAPUR & ASSOCIATES INC:					502.00
LANE TANK CO. INC					
LANETANK122	12/22/2021	RESERVOIR #3 PAINTING/REHA	62-00-00-10700	CONSTRUCTION WORK IN PROCESS	37,450.00
Total LANE TANK CO. INC:					37,450.00
DIXON ENGINEERING INC					
22-0027	01/06/2022	T MOBILE DODGE U/G REVIEW	62-00-00-23830	DEPOSITS	1,750.00
22-0028	01/06/2022	T MOBILE HOST U/G REVIEW	62-00-00-23830	DEPOSITS	1,750.00
Total DIXON ENGINEERING INC:					3,500.00
MARTELLE WATER TREATMENT					
22740	01/04/2022	SODIUM HYPOCHLORITE	62-00-00-60200	CHEMICALS	476.52
Total MARTELLE WATER TREATMENT:					476.52

Invoice Number	Invoice Date	Description	GL Account and Title	Net Invoice Amount
ALLIANT ENERGY				
145511000021	01/03/2022	361 MAIN ST WELL 2	62-00-00-60300 MISC EXPENSES & UTILITY	1,202.09
327391000021	01/03/2022	WAVERLY ST WELL 4	62-00-00-60300 MISC EXPENSES & UTILITY	440.74
348370000021	01/03/2022	WAVERLY ST WELL 3	62-00-00-60300 MISC EXPENSES & UTILITY	390.23
972745000021	01/03/2022	HASKINS ST WELL 5	62-00-00-60300 MISC EXPENSES & UTILITY	672.87
Total ALLIANT ENERGY:				2,705.93
WE ENERGIES				
070909779600	12/15/2021	HASKINS ST WELLHOUSE #5	62-00-00-60300 MISC EXPENSES & UTILITY	15.20
Total WE ENERGIES:				15.20
ALLIANT ENERGY				
347962000021	01/03/2022	DODGE ST BOOSTER	62-00-00-62300 PUMPING POWER PURCHASED	162.94
576425000021	01/03/2022	MAIN ST ENGINE ROOM	62-00-00-62300 PUMPING POWER PURCHASED	4,320.48
717061000021	01/03/2022	1401 CENTER ST BOOSTER	62-00-00-62300 PUMPING POWER PURCHASED	169.93
Total ALLIANT ENERGY:				4,653.35
HEARTLAND ENVIRONMENTAL DISTRIBUTORS IN				
104886	11/17/2021	GREASE FOR PUMPS	62-00-00-62400 PUMPING LABOR & EXPENSE	183.37
Total HEARTLAND ENVIRONMENTAL DISTRIBUTORS IN:				183.37
MARTELLE WATER TREATMENT				
22740	01/04/2022	HYDROFLUOSILICIC ACID, CHL	62-00-00-64100 CHEMICALS	4,432.44
Total MARTELLE WATER TREATMENT:				4,432.44
ALLIANT ENERGY				
974671000021	01/03/2022	361 MAIN ST HALLWAY	62-00-00-64200 LABOR & EXPENSES (LAB)	124.05
Total ALLIANT ENERGY:				124.05
USA BLUE BOOK				
790548	11/12/2021	GRADUATED CYLINDER-LAB G	62-00-00-64200 LABOR & EXPENSES (LAB)	39.72
Total USA BLUE BOOK:				39.72
WI STATE LABORATORY OF HYGIENE				
701082	12/31/2021	MONTHLY FLUORIDE SPLIT SA	62-00-00-64200 LABOR & EXPENSES (LAB)	26.00
Total WI STATE LABORATORY OF HYGIENE:				26.00
WISCONSIN EMERGENCY MGMT				
226989	01/05/2022	ANNUAL CHEMICAL REPORT S	62-00-00-64300 MISC EXPENSE	205.00
Total WISCONSIN EMERGENCY MGMT:				205.00
DUNN LUMBER				
983961	01/06/2022	ANTI FREEZE & BATTERIES	62-00-00-65100 PLANT MAINTENANCE	15.65
Total DUNN LUMBER:				15.65
HOME DEPOT CREDIT				
1161139	12/17/2021	THERMOCOUPLE-PLANT B CH	62-00-00-65100 PLANT MAINTENANCE	11.98

Invoice Number	Invoice Date	Description	GL Account and Title		Net Invoice Amount
Total HOME DEPOT CREDIT:					11.98
USA BLUE BOOK					
785285	11/08/2021	CHEMICAL TUBING TREATMEN	62-00-00-65200	MAINT WATER TREATMENT EQUIP	640.27
Total USA BLUE BOOK:					640.27
ALLIANT ENERGY					
098433000021	01/03/2022	750 WILD RIDGE DR WATER TO	62-00-00-66100	MAINT OPS-STANDPIPES	132.80
520171000021	01/03/2022	1887 DODGE ST TOWER	62-00-00-66100	MAINT OPS-STANDPIPES	83.10
Total ALLIANT ENERGY:					215.90
HOME DEPOT CREDIT					
5025034	12/13/2021	SUMP PUMP-DODGE TOWER	62-00-00-67200	RESERVOIR & STANDPIPES	134.00
9202720	12/09/2021	CONDUIT & CONNECTORS-DO	62-00-00-67200	RESERVOIR & STANDPIPES	41.22
Total HOME DEPOT CREDIT:					175.22
LC UNITED PAINTING CO INC					
DODGE WATE	11/30/2021	DODGE TOWER PAY APP 2-FIN	62-00-00-67200	RESERVOIR & STANDPIPES	2,000.00
Total LC UNITED PAINTING CO INC:					2,000.00
ASPHALT CONTRACTORS INC					
21920	12/17/2021	ASPHALT PATCHING & MAIN RE	62-00-00-67300	MAINT OF MAINS & VALVES	4,033.00
Total ASPHALT CONTRACTORS INC:					4,033.00
DIGGERS HOTLINE					
211239101	12/31/2021	BALANCE DUE DEC 2021 (115 E	62-00-00-67300	MAINT OF MAINS & VALVES	14.85
Total DIGGERS HOTLINE:					14.85
HOME DEPOT CREDIT					
7010856	12/21/2021	UTILITY LOCATE STAKES	62-00-00-67300	MAINT OF MAINS & VALVES	10.98
Total HOME DEPOT CREDIT:					10.98
SCHMITZ READY MIX INC					
0967083-IN	12/29/2021	SLURRY BACKFILL MAIN BREA	62-00-00-67300	MAINT OF MAINS & VALVES	6,450.00
Total SCHMITZ READY MIX INC:					6,450.00
USA BLUE BOOK					
789418	11/11/2021	MANHOLE HOOKS	62-00-00-67300	MAINT OF MAINS & VALVES	252.88
Total USA BLUE BOOK:					252.88
ASPHALT CONTRACTORS INC					
21920	12/17/2021	ASPHALT PATCHING & MAIN RE	62-00-00-67500	MAINT SERVICES & CURB BOX	4,033.00
Total ASPHALT CONTRACTORS INC:					4,033.00
DIGGERS HOTLINE					
211239101	12/31/2021	BALANCE DUE DEC 2021 (115 E	62-00-00-67500	MAINT SERVICES & CURB BOX	14.85

Invoice Number	Invoice Date	Description	GL Account and Title	Net Invoice Amount
Total DIGGERS HOTLINE:				14.85
ODLING CONSTRUCTION INC				
0921-73	09/15/2021	201 PRAIRIEWIND SERVICE RE	62-00-00-67500 MAINT SERVICES & CURB BOX	5,043.17
Total ODLING CONSTRUCTION INC:				5,043.17
USA BLUE BOOK				
789418	11/11/2021	CURB BOX KEYS	62-00-00-67500 MAINT SERVICES & CURB BOX	820.48
813483	12/07/2021	CREDIT-RETURN CURB BOX K	62-00-00-67500 MAINT SERVICES & CURB BOX	214.85-
Total USA BLUE BOOK:				605.63
PFI FASHIONS				
381	12/28/2021	UNIFORMS-2021	62-00-00-90200 METER READING EXPENSE	897.97
389	12/27/2021	UNIFORMS-2021	62-00-00-90200 METER READING EXPENSE	373.34
Total PFI FASHIONS:				1,271.31
AT&T				
262248865612	12/13/2021	DECMEBER TELEPHONE	62-00-00-92100 OFFICE SUPPLIES & EXPENSE	114.89
Total AT&T:				114.89
AT&T LONG DISTANCE				
RENOV	12/04/2021	262-248-0589 NOV	62-00-00-92100 OFFICE SUPPLIES & EXPENSE	.30
Total AT&T LONG DISTANCE:				.30
CAPITAL ONE				
621349727146	12/15/2021	COFFEE MAKER, COFFEE, CRE	62-00-00-92100 OFFICE SUPPLIES & EXPENSE	182.56
Total CAPITAL ONE:				182.56
CHARTER COMMUNICATIONS				
010682412212	12/21/2021	INTERNET SVC-DEC	62-00-00-92100 OFFICE SUPPLIES & EXPENSE	57.49
Total CHARTER COMMUNICATIONS:				57.49
FIRST BANKCARD				
554328613582	12/24/2021	VONAGE PHONE SVC 12/23/202	62-00-00-92100 OFFICE SUPPLIES & EXPENSE	121.22
Total FIRST BANKCARD:				121.22
HOME DEPOT CREDIT				
175571	12/08/2021	LIGHTING & GLOBE-OFFICE LI	62-00-00-92100 OFFICE SUPPLIES & EXPENSE	28.85
Total HOME DEPOT CREDIT:				28.85
MARTIN GROUP				
1281666	12/20/2021	SERVICE CONTRACT/COPIES	62-00-00-92100 OFFICE SUPPLIES & EXPENSE	102.31
Total MARTIN GROUP:				102.31
OFFICE DEPOT				
218570771001	01/10/2022	LTR SIZE POCKET FILES	62-00-00-92100 OFFICE SUPPLIES & EXPENSE	15.95

Invoice Number	Invoice Date	Description	GL Account and Title	Net Invoice Amount
218572442001	01/10/2022	PENS POCKET FILES PAPER DI	62-00-00-92100 OFFICE SUPPLIES & EXPENSE	200.47
218572443001	01/08/2022	LABELS	62-00-00-92100 OFFICE SUPPLIES & EXPENSE	60.55
Total OFFICE DEPOT:				276.97
PITNEY BOWES GLOBAL LEASE				
3315004084	12/29/2021	ACCOUNT 0010523476-PERSO	62-00-00-92100 OFFICE SUPPLIES & EXPENSE	4.26
Total PITNEY BOWES GLOBAL LEASE:				4.26
US CELLULAR				
0477613553	12/04/2021	WATER MONTHLY PHONE BILL	62-00-00-92100 OFFICE SUPPLIES & EXPENSE	124.74
Total US CELLULAR:				124.74
VELOCITY				
2021053	12/31/2021	IT SUPPORT SERVICES-07/21/2	62-00-00-92100 OFFICE SUPPLIES & EXPENSE	1,470.12
Total VELOCITY:				1,470.12
CIVIC SYSTEMS LLC				
CVC21372	12/17/2021	CIVIC SUPPORT FEES-JAN-JUN	62-00-00-92300 OUTSIDE SERVICES EMPLOYED	2,191.25
Total CIVIC SYSTEMS LLC:				2,191.25
SECURIAN FINANCIAL GROUP				
UTL LIFE INS	01/11/2022	FEB LIFE INS 2022	62-00-00-92630 LIFE INSURANCE EXPENSE	12.51
Total SECURIAN FINANCIAL GROUP:				12.51
CINTAS CORP				
5088192377	12/17/2021	FIRST AID SUPPLIES	62-00-00-93000 MISCELLANEOUS GENERAL EXP	72.14
Total CINTAS CORP:				72.14
DUNN LUMBER				
984042	01/06/2022	WINTER GLOVES	62-00-00-93000 MISCELLANEOUS GENERAL EXP	13.70
Total DUNN LUMBER:				13.70
FIRST BANKCARD				
053146113530	01/27/2021	HOLIDAY PARTY	62-00-00-93000 MISCELLANEOUS GENERAL EXP	54.00
053146113530	01/27/2021	POINTS REDEEMED-HOLIDAY P	62-00-00-93000 MISCELLANEOUS GENERAL EXP	50.00-
Total FIRST BANKCARD:				4.00
SYSTEMS DESIGN				
21618	01/05/2022	IRRIGATION SHUTDOWN	62-00-00-93000 MISCELLANEOUS GENERAL EXP	75.00
Total SYSTEMS DESIGN:				75.00
USA BLUE BOOK				
785285	11/08/2021	SAFETY VESTS	62-00-00-93000 MISCELLANEOUS GENERAL EXP	22.01
Total USA BLUE BOOK:				22.01

Invoice Number	Invoice Date	Description	GL Account and Title		Net Invoice Amount
CINTAS FIRE PROTECTION					
0F36647552	12/23/2021	ANNUAL FIRE EXTINGUISHER	62-00-00-93200	MAINTENANCE OF GENERAL PLANT	733.19
Total CINTAS FIRE PROTECTION:					733.19
WOLTER INC					
122157902	01/22/2021	CALLL OUT VISIT FOR FORK LI	62-00-00-93300	TRANSPORTATION EXPENSE	316.71
Total WOLTER INC:					316.71
Total 62:					251,070.59
Grand Totals:					273,408.23

LC United - apprvd 12/20/2021 — 2,000.00
Genesis Excavators Apprvd 12/30/2021 — 166,044.10
105,364.13

Dated: _____

Mayor: _____

City Council: _____

City Recorder: _____

Report Criteria:
Detail report.
Invoices with totals above $0.00 included.
Paid and unpaid invoices included.
Invoice Detail.GL account (2 Characters) = "61","62"

Lake Geneva Utility Commission

Dennis Lyon, President
Josh Gajewski, Utility Director

Jeff Ecklund, Water Superintendent
Ken Bauman, Wastewater Superintendent

361 W. Main Street P.O. Box 187 Lake Geneva, WI 53147 Phone (262) 248-2311
www.lgutilitycommission.com

TO: Lake Geneva Utility Commission
FROM: Josh Gajewski, Utility Director
SUBJECT: January 2022 Director's Report

OPERATIONS UPDATE

Water Operations

Administration and staff contiue the process of closing the year by completing inventory and starting to the generate information for the annual PSC report.

Crews responded to a water main break on Forrest St. during the week of 12/27/2021, repairs were completed and final restoration will be completed in the spring of '22.

We continue to feel the effects of supplychain issues, recently seeing a 35% increase on chlorine gas products, which is up by 58% in total over last year. We also continue to experience delivery delays, one of the most important being water meters. We've placed additional material orders in advance to try to bolster inventory where possible, but it remains an everchanging variable.

Wastewater Operations

Coordination for our upcoming WAS panel control upgrade continues, which is anticipated to be installed in late-January.

Progress continues on the Receiving Station project and it's anticipated that once the project plans are finalized they will be brought to the Commission for review and approval to bid.

Office & Administrative Operations

Utility work began at The Vistas of Lake Geneva development the week of January 3rd and is expected to continue into mid-February, weather dependant.

We have received a submittal for the lift station proposed for Symphony Bay – Phase 5 and the review process is underway. We anticipate the review to be complete in early February and brought to the Commission for approval thereafter.

The fourth quarter collections cycle is near close, with bills being due January 20, 2022. We continue to see a steady increase in customers utilizing PSN for account management and have reached roughly 35% of our accounts who have signed up at the end of 2021.

9. Reservoir #3 Payment – Lane Tank Co.

The requested scope of work for this project was satisfactorily completed and has been invoiced for final payment. The invoiced amount includes the $35,500 as quoted by Lane Tank Co. and approved by the Commission in October of '21. Additionally staff requested Lane Tank Co. to perform an NR code required inspection for Reservoir #1 while they were on site for an amount of $1,950. The total invoice of $37,450 has been included on the monthly bill list for payment, as there was no change to the prior Commission approval, but has been separately noticed on the agenda in the event that the Commission wish to pull it from the bill list and discuss the item it separately.

> **Staff recommends the Commission approve payment to Lane Tank Co. for an amount of $35,500 for work performed on Reservoir #3, and an amount of $1,950 for inspection services performed on Reservoir #1.**

10. Oak Terrace Water and Sewer Service

Staff has drafted a summary memo to the Commission regarding this matter, which is included in packets for review. Staff anticipates providing the Commission with additional insight at the meeting and pending Commission input, plans to revisit this topic for additional discussion at February's meeting.

> **Staff does not have a formal recommendation or request of the Commission regarding this item at this time.**

11. Sewer Credit Application – 1024 S. Lakeshore Dr.

The Utility contacted the subject property's Owner in September of 2021 due to high usage reported during the Q3-2021 billing process. Subsequently, the Owner was granted a credit for billed sewer use related to a leak that was ultimately found in the irrigation and was repaired. The Owner made contact with the Utility in January 2022 to discuss their elevated bill for Q4-2021. The Owner has since submitted a second credit application, requesting relief for the interval usage between our reading date of 9/7/2021 and the date of repairs on 10/20/2021. Correspondence between the Utility and the Owner is included for Commission review.

Current Utility policy allows a credit to be issued only one time in a five year period, so granting of a second credit application requires the approval of the Commission. Given that the elevated Q4-2021 usage is likely related to the same event, a second credit is supported by staff.

> **Staff recommends approval of the sewer credit application filed by Raymond and Colleen Egan – 1024 S. Lakeshore Dr., in an amount of $323.90.**

12. Polymer Feed System – Dewatering Process

The Utility currently utilizes a polymer feed system to assist in coagulation and further processing (dewatering) of biosolids that are generated from the treatment process. The equipment was installed in the early 2000's and has reached the end of its service life. Recently staff has noted that the equipment no longer holds a consistent dosage of material and is becoming problematic within operations.

Staff contacted the manufacturer to obtain direct replacement information, and was directed to the company that represents the equipment. A quote was obtained as part of the budget process and included in the budget expenses for 2022. The quote was updated recently and reflects an increase of approximately $2,500. The budgeted cost for this equipment was $62,500. Purchase of direct replacement equipment will allow the update to proceed without the requirement of additional project engineering and submittal to the DNR for review.

> **Staff recommends the approval of polymer feed system quote provided by Energenecs, for an amount of $62,162.16.**

13. T-Mobile Upgrade Project

Staff received a request for approval from T-Mobile/Sprint to upgrade their existing facitilties at the Host Dr. Tower. A subsequent submittal was received and reviewed by Dixon Engineering for recommendation. Dixon's preliminary recommendations were distributed to T-Mobile, whose response and abbreviated submittal is included in packets. A review of submittal #2 was also completed by Dixon, a copy of which is included for

review. T-Mobile/Sprint has requested the second Dixon review and recommendations be reviewed by the Commission for potential conditional approval.

Staff recommends the Commission to affirm the recommendation outlined in Dixon Engineering's review letter dated January 13, 2022 and table the approval of the T-Mobile/Sprint project until all noted items are resolved.

14. US Cellular Proposal – Monopole Installation – Center St. Tower

Pursuant to Commission discussion in September 2021, US Cellular has submitted preliminary plans for a proposal to contruct a monopole near the Center St. Tower, and consideration to relocate a portion of their equipment to the new facility. This installation has been preliminarily discussed with the City's Development Review Committee and was found to be a feasible option. While there are many items necessary to be discussed, this option could provide relief to current or future cellular loadings requested at the Center St. Tower.

Staff requests the input of the Commission regarding the conceptual installation of a monopole by US Cellular at the Center St. Tower.

15. Convenant Harbor PIP – Triplet Razing – Twins Construction

Staff has been working with Covenant Harbor to review a PIP submittal, which includes the razing of three buildings (Triplets) and the construction of two new buildings (Twins). The existing water and sanitary sewer facilities have historically been considered a private system and maintained by Covenant Harbor.

During the ongoing PIP review, a number of anomalies have been identified, which continue to be documented and proposals to resolve being drafted. Staff will participate in a Development Review Committee meeting scheduled for 1/17/2022 and believes there will be additional information to supply the Commissioners with at the time of the UC meeting.

A copy of the most recent submittal is included for reference.

Staff anticipates providing a formal recommendation to the Commission on this item at the time of the meeting.

2021

LANE TANK COMPANY INC.
WATER TOWER PAINTING & REPAIR • INSPECTIONS
P.O. BOX 500 • MENOMONIE, WI 54751
OFFICE: 715-235-3110 • FAX: 715-235-5385
lanetank@charter.net

INVOICE

Date: December 22, 2021

Bill To:
LAKE GENEVA UTILITY COMMISSION
Attn: Josh Gajewski
P.O. Box 187
Lane Geneva, WI 53147

DESCRIPTION	AMOUNT
RE: Ground Reservoir #3	
Inspecting the reservoir with a DNR Inspection Report submitted to the Utility	$ 1,950.00
Interior maintenance painting project 21-03	$ 35,500.00
TOTAL	$ 37,450.00

DATE APPROVED 1/4/22
APPROVED BY JE
ACCOUNT #(S) 62.107.00
DESCRIPTION Reservoir # painting / Rehab / Inspection.
PO #

Please Remit To:
LANE TANK CO., INC.
P.O. Box 500
Menomonie, WI 54751

If you have any questions concerning this invoice, contact our Business office at (715)235-3110 or lanetank@charter.net

THANK YOU FOR YOUR BUSINESS!

Lake Geneva Utility Commission

Dennis Lyon, President
Josh Gajewski, Utility Director

Jeff Ecklund, Water Superintendent
Ken Bauman, Wastewater Superintendent

361 W. Main Street P.O. Box 187 Lake Geneva, WI 53147 Phone (262) 248-2311
www.lgutilitycommission.com

TO: Lake Geneva Utility Commission
FROM: Josh Gajewski, Utility Director
SUBJECT: Oak Terrace Water and Sewer Service
DATE: January 14, 2022

Background

The Utility was contacted in October to respond to a potential system leak that had surfaced near 351 Oak Terrace. Upon arrival staff informed the Owner that the majority of the Oak Terrace infrastructure was assumed to be private, including the report area and repairs would not be borne on the Utility to complete. After conversations with the Owner of ZOP 00389 and 351 Oak Terrace, the Utility attempted locating infrastructure that was installed to serve the area and within the assumed area of its responsibility to enable repairs to be made.

Subsequently:

1. The Utility performed work along the northern property line of Oak Terrace (OT) and the southern property line of the YMCA to repair a known 2" curb stop that was found to be leaking during our investigations (this is the service that we anticipated to have served approximately 4 homes in OT).
2. Upon fixing that curb stop, a series of checks were performed to identify whether the homes had water service with the curb stop turned off. It was found that the 2" curb stop did not influence service to any home in OT.
3. During the 2" curb stop work, a 6" main valve was utilized to isolate the 2" for the needed repairs, which was found to be in poor condition and also required repair.
4. After the 6" valve work completed, another series of checks were performed to identify whether the homes had water service with the valve off. The 6" valve was found to isolate water service for #348, #351, #321 and #301 OT.
5. Subsequently we did additional excavation near the hydrant adjacent to #367 OT to identify whether the 2" service was connected to the 6" main feeding the hydrant. With that work we found that when the hydrant was installed in the late 90s, the 2" service was indeed connected to 6" main and that the 2" curb stop identified in 1. above, was no longer in use and had been abandoned somewhere in between the curb stop and the hydrant.
6. During the same timing of the work in (5). above, the original leak that was reported near #351 was also excavated and repaired. Once excavated, it was found that there was a split in the top of the 2" plastic water line that had been placed. No further investigation was performed to further identify where the service was laid or to who it may provide service to within OT. These repairs were complete at the cost of the Owner.

Additional Actions

After completion of the water excavation work, staff reviewed the contents of the "Oak Terrace" file that we have at our office. While there are a number of topics contained therein, a few of the biggest takeaways are identified below.

1. There has been a documented concern on the Utility's behalf dating back to the early 90s, that relate to the ownership and maintenance obligations of not only the water service, but sanitary sewer service within OT. An incident with a sanitary sewer backup on 6/4/1993 seems to be where the majority of formal correspondence originated, which culminated on 10/11/1993 with a letter being sent to the OT property owners at the direction of the then City of Lake Geneva Sewer Committee and the Lake Geneva Water Commission (now a single entity - Lake Geneva Utility Commission - cr. 2001). In the letter it indicates that both bodies took the position that any operational problems with the water and sewer within Oak Terrace would be the sole responsibility of the owner(s), as the facilities within Oak Terrace were never dedicated over to the City. Further the City felt it was within its rights to treat Oak Terrace as a private subdivision with private roads and facilities.
2. The largest concern in 1993, which was confirmed during the recent field investigation, is that there seems to be two sanitary sewer structures that have water lines run through them, which is a concern for obvious health and safety reasons. Where those lines come from and who they service, if they service anyone, is unknown.
3. Correspondence between the City, Utility and Owners continued for the duration of 1993 and into 1994 and 1995. On December 7, 1995 a release letter was signed by Peter Pappas, former owner of parcel ZOP 00389, to permit City staff and engineers access to the parcel to assess the condition, size and location of private water and sewer mains that may be installed within the private property. This release letter indicates that the City and Utility maintained their position of the improvements being private, at least to that point, which the former owner acknowledged through the release document.
4. After a change of Director, the Utility continued to compile information on other utility services (electric, gas, phone) in the OT area during '96 & '97. Additionally, there were very preliminary layouts and budgetary quotes drafted aimed at correcting the known utility deficiencies, primarily focused on water service. These plans ranged from only rerouting the 2" service(s) around the sanitary sewer manholes, to installing a replacement 2" poly service to the OT area or potentially installing a new 4" service to provide water service and a nominal amount of public fire protection.
5. While the finite details are hazy, it seems as though the Utility chose a completely different alternative in the spring/summer of 1999, which entailed the installation of 80' of 6" main going south from the OT/YMCA property line, two main valves, one new hydrant and the reconnection of the existing 2" service to that main. The only record we have of this work is a quote from a local contractor that was prepared on 4/26/1999, which also provided a quote for the 2" manhole reroute option mentioned in (3). above.
6. Finally, we have a fully executed copy of a utility easement dated 6/8/1999 which describes a 15' by 99' area on parcel ZOP 00389K and ZOP 00389D, which would generally coincide with the known installation and the quote referenced in (4). above. Unfortunately, we have not been able to find record that this easement was actually recorded with Walworth County and it is assumed at this point that it was not. Aside from a small number of inquiries related to the redevelopment of OT, the easement document is the latest substantive correspondence contained in our file on OT.

Recent Action

Summary correspondence similar to this memo has been sent to the Owner of ZOP 00389, who we believe will be instrumental in advancing remediation work.

Requested Action

Staff will be working to prepare alternatives for consideration by the Commission, which will include recommendation on easements to document ownership, remediation to known deficiencies and a timeline to work toward the completion of both.

Oak Terrace Area

Legend

- Street Names
- Private Roads
- Addresses
- County Municipalities
- Tax Parcels (Air Photo)
- Parks
- Alley
- Right-Of-Way
- Hydrology
- ETZ
- Building Footprints
- City Limits

Data on this map may or may not be accurate, current, or otherwise reliable. For reference only.

Note

0 55.84 111.7

Feet

© Kapur and Associates, Inc. 01/14/2022

Lake Geneva Utility Commission
Application for Sewer Credit

Customer Name Raymond + Colleen Egan

Service Address 1024 S. Lakeshore Drive
Lake Geneva WI 53147

Mailing Address 6950 Lexington Lane
Niles IL 60714

Phone # (847) 588 0632

Email Address EE1025@AOL.com

Utility Acct. # 91600 02

Cause of Leak : System Leak

Date Leak Found: October 8, 2021

Date Leak Repaired: October 20, 2021

I acknowledge that the information given above is true and correct to the best of my knowledge. I have read and understand the Utility's Sewer Credit Policy. Undstanding that this property is not eligible for another credit for 5 years from the approval of this application.

Raymond W. Egan — Signature — 1/5/2022 — Date

Colleen Egan — Signature (If co-ownership) — 1/5/2022 — Date

Customer Application Checklist

- [x] This form has been completely filled out and submitted to Utility
- [x] Necessary repairs have been made and copies of receipts attached to this form

Utility Commission Office Hours (Monday - Friday 7:30 am - 4 pm)
Phone: (262) 248 - 2311
Email: info@lgutilities.org

UTILITY USE ONLY

Site visit performed to verify repairs were made.

Date: _____ By: _____

- [ ] Repairs found acceptable to eliminate noted leak (Y or N)

Current Usage: _____ Cost Per Unit: _____

Average Usage: _____ **Calculated Credit:**

Difference: _____ (Cost per unit x Difference) _____

Appoved By: _____

Date: _____

LAKE GENEVA UTILITY COMMISSION
P.O. Box 187
LAKE GENEVA, WI 53147-0187

ADDRESS SERVICE REQUESTED

SERVICE ADDRESS
1024 S LAKE SHORE DRIVE

BILL CODE	READINGS PREVIOUS	READINGS CURRENT	USAGE	AMOUNT
W1	0	0	0	195.98
Water Fixed Charge				19.10
Sewer Usage Charge			82	336.20
Sewer Fixed Charge				20.06
Public Fire				11.45
Special Meter Read				0.00
Water Penalty Charge				0.00
Sewer Penalty Charge				0.00
Misc. Penalty Charge				0.00

PRESORTED
FIRST CLASS
U.S. POSTAGE
PAID 1OZ.
LAKE GENEVA, WI
PERMIT NO. 103

DUE DATE 01/20/2022
BILLING DATE 01/01/2022
ACCOUNT NO. 9.1600.02
SERVICE TYPE RES CITY

DETACH HERE →

AMOUNT DUE 582.79
AFTER DUE DATE PAY 588.61
SERVICE FROM - TO 10/06/21 - 12/03/21

SEE BACK FOR EXPLANATIONS

E-bills & payments available at www.lgutilitycommission.com

RETURN BOTTOM PORTION WITH PAYMENT

DUE DATE	AFTER DUE DATE PAY
01/20/2022	588.61

9.1600.02

ACCOUNT NO. 9.1600.02 AMOUNT DUE 582.79

Service Address: 1024 S LAKE SHORE DRIVE

RAYMOND & COLLEEN EAGAN
6950 LEXINGTON LANE
NILES IL 60714

Date	Type	Reference Number	Service	Quantity Billed	Description	Amount
12/31/2020	Billing	2233	Wtr 1	5.	Import Readings	11.95
12/31/2020	Billing	7084	WFixd	0.	Automatic Billing	16.77
12/31/2020	Billing	7084	Sewer	5.	Automatic Billing	20.50
12/31/2020	Billing	7084	SFixd	0.	Automatic Billing	17.61
12/31/2020	Billing	7084	PubFr	0.	Automatic Billing	10.05
01/08/2021	Pmt	100	*	0.	Utility Billing Receipts	76.88-
03/31/2021	Billing	2248	Wtr 1	2.	Import Readings	4.78
03/31/2021	Billing	7140	WFixd	0.	Automatic Billing	19.10
03/31/2021	Billing	7140	Sewer	2.	Automatic Billing	8.20
03/31/2021	Billing	7140	SFixd	0.	Automatic Billing	20.06
03/31/2021	Billing	7140	PubFr	0.	Automatic Billing	11.45
04/09/2021	Pmt	62	*	0.	Utility Billing Receipts	63.59-
06/30/2021	Billing	2264	Wtr 1	2.	Import Readings	4.78
06/30/2021	Billing	7048	WFixd	0.	Automatic Billing	19.10
06/30/2021	Billing	7048	Sewer	2.	Automatic Billing	8.20
06/30/2021	Billing	7048	SFixd	0.	Automatic Billing	20.06
06/30/2021	Billing	7048	PubFr	0.	Automatic Billing	11.45
07/09/2021	Pmt	122	*	0.	Utility Billing Receipts	63.59-
09/30/2021	Billing	2265	Wtr 1	268.	Import Readings	565.46
09/30/2021	Billing	7061	WFixd	0.	Automatic Billing	19.10
09/30/2021	Billing	7061	Sewer	268.	Automatic Billing	1,098.80
09/30/2021	Billing	7061	SFixd	0.	Automatic Billing	20.06
09/30/2021	Billing	7061	PubFr	0.	Automatic Billing	11.45
10/15/2021	Pmt	67	*	0.	Utility Billing Receipts	1,714.87-
12/31/2021	Billing	2275	Wtr 1	82.	Import Readings	195.98
12/31/2021	Billing	7067	WFixd	0.	Automatic Billing	19.10
12/31/2021	Billing	7067	Sewer	82.	Automatic Billing	336.20
12/31/2021	Billing	7067	SFixd	0.	Automatic Billing	20.06
12/31/2021	Billing	7067	PubFr	0.	Automatic Billing	11.45

3.	Avg Units of Use - Prior 3 Quarters w/o leak
$ 4.10	Cost per Unit of Sewer
$ 12.30	Avg. Use x Unit Cost
$ 323.90	Calc. Sewer Use Credit (Based on Avg Use)
$ 258.89	Revised Amount Due for Q4 - 2021 Bill

Summarize options: Adjustment, Billings, Interest, Payments

Q4 - 2021 Amount Due	582.79

Lake Geneva Utility Commission
Application for Sewer Credit

Customer Name Raymond + Colleen Egan

Service Address 1024 S. Lakeshore Drive
Lake Geneva WI 53147

Mailing Address 6950 Lexington Lane
Niles IL 60714

Phone # (847) 588 0632

Email Address EE1025@AOL.COM

Utility Acct. # 91600 02

Cause of Leak : System Leak

Date Leak Found: October 8, 2021

Date Leak Repaired: October 20, 2021

I acknowledge that the information given above is true and correct to the best of my knowledge. I have read and understand the Utility's Sewer Credit Policy. Undstanding that this property is not eligible for another credit for 5 years from the approval of this application.

Signature — Date: 10-22-21

Signature (If co-ownership) — Date: 10-22-21

Customer Application Checklist

- [x] This form has been completely filled out and submitted to Utility
- [x] Necessary repairs have been made and copies of receipts attached to this form

Utility Commission Office Hours (Monday - Friday 7:30 am - 4 pm)
Phone: (262) 248 - 2311
Email: info@lgutilities.org

UTILITY USE ONLY

Site visit performed to verify repairs were made.

Date: _____ By: _____

- [ ] Repairs found acceptable to eliminate noted leak (Y or N)

Current Usage: _____ Cost Per Unit: _____

Average Usage: _____ **Calculated Credit:**

Difference: _____ (Cost per unit x Difference) _____

Appoved By: _____

Date: _____

Northern Mist Lawn Sprinkler, ltd.

262-539-3474
38009-31st Street
Burlington WI 53105

Invoice

Date	Invoice #
10/21/2021	43225

Bill To
Ray Egan 6950 Lexington Lane Niles IL 60714

P.O. No.	Terms	Project
	Due on receipt	

Quantity	Description	Rate	Amount
2	Drip Line Coupling	0.65	1.30
2	Drip Line Tubing	0.45	0.90
	Service Call & Labor reactivated system - repaired drip pipe - closed open valve - verified water meter went static - rewinterized system	165.00	165.00

If paying by Credit Card there is a 4% accommodation fee added to the total due

Total $167.20

Date	Type	Reference Number	Service	Quantity Billed	Description	Amount
12/31/2020	Billing	2233	Wtr 1	5.	Import Readings	11.95
12/31/2020	Billing	7084	WFixd	0.	Automatic Billing	16.77
12/31/2020	Billing	7084	Sewer	5.	Automatic Billing	20.50
12/31/2020	Billing	7084	SFixd	0.	Automatic Billing	17.61
12/31/2020	Billing	7084	PubFr	0.	Automatic Billing	10.05
01/08/2021	Pmt	100	*	0.	Utility Billing Receipts	76.88-
03/31/2021	Billing	2248	Wtr 1	2.	Import Readings	4.78
03/31/2021	Billing	7140	WFixd	0.	Automatic Billing	19.10
03/31/2021	Billing	7140	Sewer	2.	Automatic Billing	8.20
03/31/2021	Billing	7140	SFixd	0.	Automatic Billing	20.06
03/31/2021	Billing	7140	PubFr	0.	Automatic Billing	11.45
04/09/2021	Pmt	62	*	0.	Utility Billing Receipts	63.59-
06/30/2021	Billing	2264	Wtr 1	2.	Import Readings	4.78
06/30/2021	Billing	7048	WFixd	0.	Automatic Billing	19.10
06/30/2021	Billing	7048	Sewer	2.	Automatic Billing	8.20
06/30/2021	Billing	7048	SFixd	0.	Automatic Billing	20.06
06/30/2021	Billing	7048	PubFr	0.	Automatic Billing	11.45
07/09/2021	Pmt	122	*	0.	Utility Billing Receipts	63.59-
09/30/2021	Billing	2265	Wtr 1	268.	Import Readings	565.46
09/30/2021	Billing	7061	WFixd	0.	Automatic Billing	19.10
09/30/2021	Billing	7061	Sewer	268.	Automatic Billing	1,098.80
09/30/2021	Billing	7061	SFixd	0.	Automatic Billing	20.06
09/30/2021	Billing	7061	PubFr	0.	Automatic Billing	11.45

3.	Avg Units of Use - Prior 3 Quarters
4.10	Cost per Unit of Sewer
12.30	Avg. Use x Unit Cost
1,086.50	Calc. Sewer Use Credit (Based on Avg Use)
$ 628.37	Revised Amount Due for Q3 - 2021 Bill

Q3 - 2021 Amount Due 1,714.87

Summarize options: Adjustment, Billings, Interest, Payments

Check 628.37

Energenecs

Proposal Service

DATE: January 14, 2022

PROJECT: UGSI Polyblend DD4 Polymer Feeder

QUOTE: 202110-28094

TO: Ken Bauman Wastewater Superintendent
Lake Geneva Wastewater Treatment Plant
262-949-0779

Energenecs is pleased to offer the following scope of responsibility for the Lake Geneva Wastewater Treatment Plant project.

Specifically includes:

One (1) PolyBlend Model DD4 dry polymer disperse activation/feed system skid mounted without compressor. Includes a 2.5 cu-ft extension hopper, lid with handle & bindacator level switch.

- Skid includes unit/s with all components mounted plumbed and wired
- 304 stainless steel volumetric feeder, 2.5 cubic foot stainless steel extension hopper with lid and bindacator level switch
- 316 stainless steel two stage high energy wetting/activation device.
- Includes potable dilution water flow control valve, electric solenoid valves for water flow on/off control, failsafe to close junction box for interface wiring to local control panel.
- Dry polymer: 360 lb/hr
- Power supply: 480/60/3
- Water supply: 30 GPM

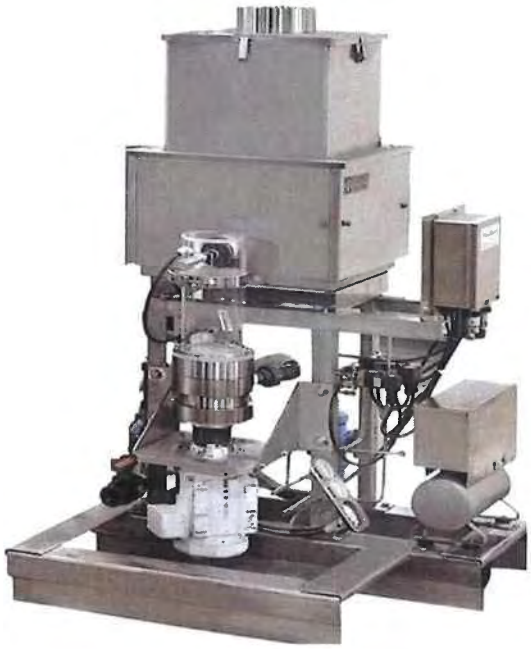

Note: Mix tanks are not included

700 EAST MILAN DRIVE, SAUKVILLE, WISCONSIN 53080 | PH: 262-377-6360 | WWW.ENERGENECS.COM

Energenecs

PROPOSAL Includes

Shop drawing submittal with detailed scope of supply, project schedule, technical information, drawings, receiving/handling/storage, warranty statement. One (1) day of startup.

Operation and maintenance manuals with technical data.

PROPOSAL EXCLUSIONS

All taxes, fees, lien waives, bonds and licenses. Mechanical and electrical installation labor. Civil work including supply of anchor bolts. Interconnecting piping. Interconnecting wiring. Valves, fittings, appurtenances. Decks, stairs and mezzanines. Installation supervision. Room ventilation, air conditioning, or lighting. Videotaping (unless a videotape agreement is signed).

Price: $62,162.16

All applicable taxes will be added to the above price.
Energenecs terms and conditions attached apply.

Submittals: 4 to 6 Weeks From Approval and Receipt of Purchase Order
Delivery: 5 to 7 Weeks From Approval

If you have any questions, please contact me, Dan Waala, at 262-235-4941 or my cell at 414-940-4004.

I look forward to working with you on this project.

700 EAST MILAN DRIVE, SAUKVILLE, WISCONSIN 53080 | PH: 262-377-6360 | WWW.ENERGENECS.COM

Energenecs

Terms & Conditions

PURCHASE ORDER FORMS

Orders submitted on BUYER'S purchase order forms will be accepted only with the express understanding that no statements, clauses or conditions contained in said order form will be binding on the SELLER if they in any way modify the SELLERS Terms & Conditions of sale.

PRICES

Pricing is valid for 30 days from issuance. All prices are F.O.B. factory unless expressly stated otherwise. **Prices DO NOT include sales, excise, municipal, state or other government taxes.**

ACCEPTANCE

Acceptance of a quotation, whether by a separate purchase order or by other means, shall constitute an acknowledgment of the quotation as written and an acceptance of the Terms & Conditions hereof.

CREDIT APPROVAL

The credit terms specified on the face hereof are subject to SELLERS continuing approval of BUYERS credit and if, in SELLERS sole judgment, BUYERS credit or financial standing is so impaired as to cause SELLER in good faith to deem itself insecure, SELLER may withdraw the extension of credit and require other payment terms.

FORCE MAJEURE

Seller will not be liable for failure to deliver or perform, for any delay in the performance of orders or contracts, or in the delivery or shipment of goods, or for any damages suffered by the BUYER by reason of such delay or failure, when such delay or failure is, directly or indirectly, caused by, or in any manner arises from delays of suppliers or carriers or any other cause or causes beyond SELLER'S control.

PAYMENT

95% payment due on shipment of equipment to job site. 5% due on acceptance of the system. Net 30 days on all invoices. 95% payment must be received before start up can be authorized. Any balance owed by BUYER is subject to a 1.5% per month delinquency charge until paid. **FIELD STARTUP SERVICE CANNOT BE AUTHORIZED WITHOUT 95% PAYMENT BEING REMITTED TO SELLER IN ADVANCE OF PERFORMING START UP SERVICES. If no startup is required, 100% payment is due net 30 days from invoice date. BUYERS PAYMENT OBLIGATION IS IN NO WAY CONTINGENT UPON BUYERS RECEIPT OF PAYMENT FROM ANY OTHER PARTY.** In addition to all other amounts due hereunder, BUYER shall reimburse SELLER in full for all collection costs or charges, including reasonable attorney fees, which SELLER may incur with respect to the collection of past due amounts from BUYER, including interest on overdue accounts. If BUYER is in default under this or any other agreement with SELLER, SELLER may, at their option, defer performance hereunder until such default is cured. SELLER shall have no obligation to provide factory startup assistance and/or factory training until all invoices (including retentions) for equipment have been paid in full.

WARRANTY

SELLER is a system integrator/manufacturer's representative and, as such, our product guaranty(s) and warranty(s) is set forth in the manufacturer's instruction book or operation and maintenance manual that accompanies each product. SELLER does not offer its customers any warranty or guarantee that would impose upon SELLER greater obligations than those imposed by the manufacturers we represent.

SELLER shall not be liable for any incidental or consequential loss, damage or expense arising directly or indirectly from the use of the product. SELLER shall not be liable for any damages or charges for labor or expense in making repairs or adjustments to the product within the warranty period without prior written approval of SELLER. SELLER shall not be liable for any damages or charges sustained in the adaptation or use of its engineering data or services.

700 EAST MILAN DRIVE, SAUKVILLE, WISCONSIN 53080 | PH: 262-377-6360 | WWW.ENERGENECS.COM

SELLER makes no warranties, expressed or implied, except as set forth in such standard Terms & Conditions of sale in this agreement. No claims of any kind shall be greater in amount than the purchase price of the SELLER'S products in respect of which such claims are made. SELLER is not liable in any event hereunder for any consequential, incidental or liquidated damages or penalties. **IN ANY CASE SELLER SHALL NOT BE LIABLE FOR FIELD WORK BY STAFF OTHER THAN THE SELLER UNLESS EXPRESSLY AUTHORIZED IN WRITING, IN ADVANCE, BY THE SELLER. THIS IS IN SPECIFIC REGARD TO BACK CHARGES.**

BUYER agrees to reimburse SELLER for ALL expenses incurred in servicing a warranty request if the cause of the warranty request is determined to be other than a manufacturer's defect or failure of a SELLER supplied component.

CLAIM PERIODS

All goods are shipped at the risk of the buyer after they have been delivered by SELLER to the carrier. BUYER shall immediately inspect said equipment upon receipt of equipment and any damage must be noted on the freight carriers bill of lading at time of receipt. SELLER is not liable for any shortages or non-conformance unless notified thereof by BUYER within 10 days after BUYERS receipt of said equipment.

CHANGES, CANCELLATIONS, RETURNS

All requests for changes, cancellations and/or returns must have prior written approval and are conditional on manufacturers cancellation/return policies and subject to a restocking and/or service charge for order handling, inspection, reconditioning and repackaging, as required. Authorized returned goods must be packaged and shipped prepaid to manufacturer. Products more than six (6) months old cannot be returned for credit. Terms and conditions stated herein shall also govern and be binding to all BUYER requested/approved change orders.

SELLER shall retain a security interest in the equipment until the full purchase price has been paid. BUYER'S failure to pay any amounts when due shall give SELLER the right to possession and removal of the equipment at any time upon giving at least ten (10) days prior written notice. SELLER'S taking of such possession shall be without prejudice to any other remedies SELLER may have. Title to the equipment shall transfer to the BUYER upon shipment from SELLER.

SUBMITTAL DRAWINGS & OPERATION/MAINTENANCE MANUALS

Submittal drawings and operation & maintenance documentation is provided in accordance with plan documents.

THE SELLER RESERVES THE RIGHT TO REVIEW AND REVISE THIS PROPOSAL AFTER THIRTY DAYS FROM ISSUANCE.

By: Energenecs, Inc. Dan Waala

I accept this proposal and all terms thereof:

Accepted: _____

Title: _____

Date: _____ PO #: _____

700 EAST MILAN DRIVE, SAUKVILLE, WISCONSIN 53080 | PH: 262-377-6360 | WWW.ENERGENECS.COM

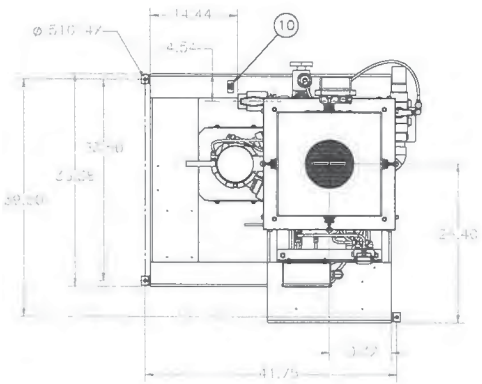

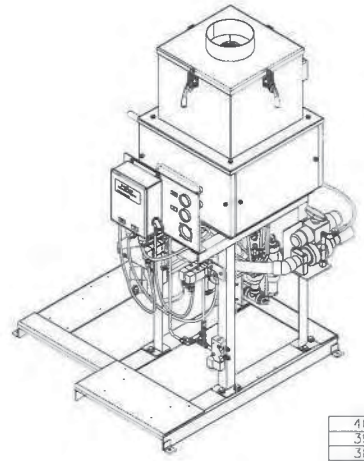

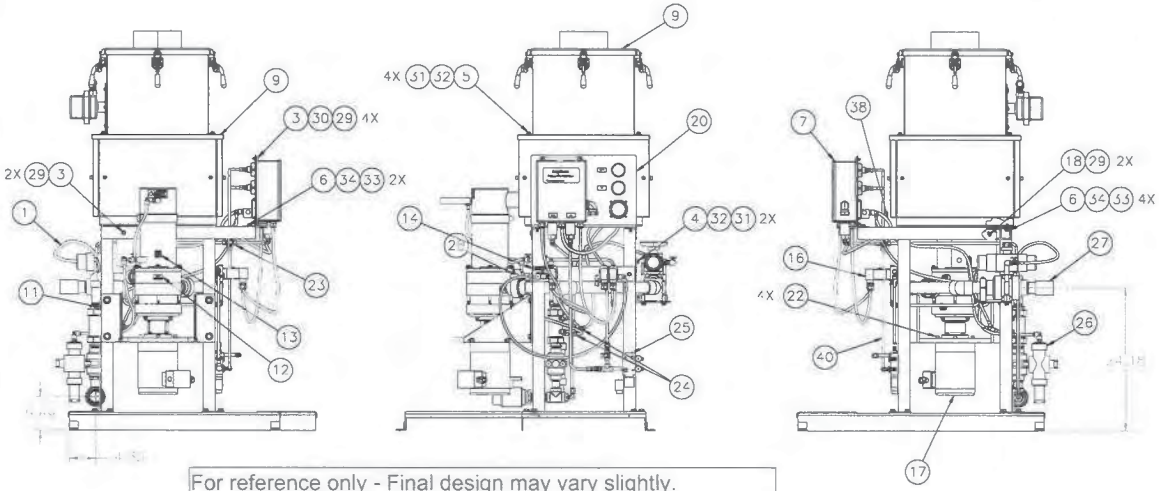

For reference only - Final design may vary slightly.

ITEM NO.	PART NUMBER	DESCRIPTION	MATERIAL	QTY.
40	RM9414061	TUBE, RIGID, .375 OD X .313 ID	304 STAINLESS STEEL	9FT
39	RM9410101	1.00 IN OD FLEX HOSE	PVC	2FT
38	RM2702408	CONDUIT, FLEXIBLE, .250 ID	PVC	2FT
37	RM1973161	CORD, 16/3, TYPE SEO, 90C, 600V, BL	PVC	2
36	P56651	WASHER, FLAT, NO. 10	316 STAINLESS STEEL	4
35	9749316	WASHER, LOCK, NO. 10	316 STAINLESS STEEL	4
34	9742316	WASHER, LOCK, .375	316 STAINLESS STEEL	6
33	9742300	WASHER, FLAT, .375	316 STAINLESS STEEL	6
32	9741316	WASHER, LOCK, .313	316 STAINLESS STEEL	6
31	9741300	WASHER, FLAT, .313	316 STAINLESS STEEL	6
30	9740315	WASHER, LOCK, .250	316 STAINLESS STEEL	6
29	9740300	WASHER, FLAT, .250	316 STAINLESS STEEL	10
28	9693006	VOLUTE ASSEMBLY, DD4		1
27	9589407	VALVE ASSY, 1.500 IN, FLOW CONTROL		1
26	9589406	VALVE ASSY, 1.00 IN, FLOW CONTROL		1
25	9581203	SOLENOID VALVE ASSEMBLY, DUMP VALVE		1
24	8857201	TEE, SWIVEL, RUN, OD, .375 OD	ACETAL	2
23	8856603	TEE, .375 IN OD TUBE	316 STAINLESS STEEL	2
22	7776920	SCREW, CAP, SHD, .375-16 UNC-2A X 1.250 LG	316 STAINLESS STEEL	4
21	7770020	SCREW, CAP, SHD, 10-24 UNC-2A X 1.500 LG	316 STAINLESS STEEL	4
20	6389928	PANEL ASSEMBLY, GAUGE CONTROL		1
19	6029330	NUT, HEX, 10-24 UNC-2B	316 STAINLESS STEEL	4
18	6022031	NUT, HEX, LOCK, .250-20 UNC-2B	316 STAINLESS STEEL	2
17	5912405	MOTOR ASSY, DD4, 460VAC		1
16	5789004	MANIFOLD ASSY, AIR/WATER		1
15	5784001	MANIFOLD ASSEMBLY		1
14	5559020	TAG, " DO NOT CLOSE"	PHENOLIC	1
13	5551209	LABEL, "WATER FLOW"	VINYL	1
12	5551012	LABEL, "MOTOR ROTATION"	VINYL	1
11	5551007	LABEL, "SOLUTION OUTLET"	VINYL	1
10	5551006	LABEL, "WATER INLET"	VINYL	1
9	4990108	HOPPER ASSEMBLY W/COLLAR		1
8	3894001	FEEDER, SINGLE DRIVE DRY, MODEL 602M		1
7	3668301	JUNCTION BOX ASSEMBLY	316 STAINLESS STEEL	1
6	1602316	SCREW, CAP, HH, .375-16 UNC-2A X 1.00 LG	316 STAINLESS STEEL	6
5	1601334	SCREW, CAP, HH, .313-18 UNC-2A X 2.50 LG	316 STAINLESS STEEL	4
4	1601312	SCREW, CAP, HH, .313-18 UNC-2A X .750 LG	316 STAINLESS STEEL	2
3	1600312	SCREW, CAP, HH, .250-20 UNC-2A X .750 LG	316 STAINLESS STEEL	8
2	1360032	BASE ASSEMBLY, DD4		1
1	27342	POLYETHYLENE TUBING, .375 OD		10FT

REV.	DESCRIPTION:	DATE:	DRW:	CHKD:	APVD:

COMPANY CONFIDENTIAL

THIS DOCUMENT AND ALL INFORMATION CONTAINED HEREIN ARE THE PROPERTY OF UGSI CHEMICAL FEED, INC. AND/OR ITS AFFILIATES. THE DESIGN CONCEPTS AND INFORMATION CONTAINED HEREIN ARE PROPRIETARY TO UGSI CHEMICAL FEED, INC. AND ARE SUBMITTED IN CONFIDENCE. THEY ARE NOT TRANSFERABLE AND MUST BE USED ONLY FOR THE PURPOSE FOR WHICH THE DOCUMENT IS EXPRESSLY LOANED. THEY MUST NOT BE DISCLOSED, REPRODUCED, LOANED OR USED IN ANY OTHER MANNER WITHOUT THE EXPRESS WRITTEN CONSENT OF UGSI CHEMICAL FEED, INC. IN NO EVENT SHALL THEY BE USED IN ANY MANNER DETRIMENTAL TO THE INTEREST OF UGSI CHEMICAL FEED, INC. ALL PATENT RIGHTS ARE RESERVED. UPON THE DEMAND OF UGSI CHEMICAL FEED, INC. THIS DOCUMENT, ALONG WITH ALL COPIES AND EXTRACTS, AND ALL RELATED NOTES AND ANALYSES, MUST BE RETURNED TO UGSI CHEMICAL FEED, INC. OR DESTROYED, AS INSTRUCTED BY UGSI CHEMICAL FEED, INC. ACCEPTANCE OF THE DELIVERY OF THIS DOCUMENT CONSTITUTES AGREEMENT TO THESE TERMS AND CONDITIONS.

UNLESS OTHERWISE SPECIFIED

DIMENSIONS EXCEPT MACHINED HOLE DEPTH MARKED "DEEP"

ONE PLACE DEC. ±.050
TWO PLACE DEC.± .010
THREE PLACE DEC.± .005

SURFACE FINISH 125

ALL WELD SYMBOL DIMENSIONS ARE MINUMUM.

CLIENT: FAIRFIELD CA.

TITLE: DD4 ASSEMBLY, DP2000

DRAWING NUMBER: 552472-SA2

UGSI Chemical Feed, Inc.
Vineland NJ, USA - Tel. (856) 896-2160
Web - www.ugsichemicalfeed.com
E-Mail - info@ugsichemicalfeed.com

CH'K: | REV: 1 | PROJECT NO.: 552472

ENG: | SCALE: 1:10 | DATE: 6/30/2015

MAN'G: | DR'N: SCOLE

THIRD ANGLE PROJECTION | DESIGN CENTER: USA | MATERIAL: | SHEET: 1 OF 1

TOLERANCES TO ASME Y14.5M | MODEL: DP2000 | DWG: 552472-SA2 | WEIGHT: | D | C 2014

DIXON

ENGINEERING & INSPECTION SERVICES FOR THE COATING INDUSTRY

4811 S. 76th Street
Suite 109
Greenfield, WI 53220
Telephone: (414) 529-1859
Fax: (414) 282-7830

January 13, 2022

RE: Lake Geneva Utility Commission
T-Mobile (ML70554A)
Host Composite Tank
Drawing Review #2

Mr. Josh Gajewski
Utility Director
Lake Geneva Utility Commission
361 Main Street
Lake Geneva, WI 53147

Dear Mr. Gajewski:

Dixon Engineering, Inc. (DIXON) has reviewed the revised design drawings and the revised structural documents for the T-Mobile upgrade on the Host composite tank located in Lake Geneva, Wisconsin. The documents reviewed include:

- The revised design drawings for the project were completed by W-T Group and they are dated January 10, 2022 (Rev. 4).
- The revised structural calculations were completed by W-T Group and they are dated January 7, 2022.
- The revised structural mount analysis was completed by W-T Group and it is dated January 7, 2022.

This is the second review by DIXON for this project. In the first review DIXON had a list of items to be addressed labeled A to I. The following is a comment regarding each of the items as they were addressed in the revised documents.

A. The structural calculations for the tank have been reviewed. We did not find any significant changes.

   1. The structural calculations are stamped and signed by a Licensed Professional Engineer in the State of Wisconsin.
   2. This document with the date is referenced on Sheet A-1 in the design drawings. This date needs to be updated to match the final structural calculations for the project.
   3. The calculations are limited to a comparison of the effective projected areas of the proposed versus existing antennas. This is not sufficient to show that the installation meets the required code requirements. If W-T Group were to provide their own previous calculations that showed the tower could support what is existing on the tower and were able to show that the proposed installation does not create an increase in wind load or overturning moment this may be acceptable. Otherwise, the analysis should show the original tower loading versus the added antenna loading (including anything that was not originally on the tower). If that exceeds the 10% allowed by IEBC, they will need to provide additional calculations.
      i. It is our opinion that a full analysis is required. We have not seen the calculations for the existing equipment; therefore, we cannot verify that the tank can support the existing (or proposed equipment with less loading). Unless they performed the calculations on the existing equipment and can provide those showing the tower can support the existing installation they should be performing their own full analysis on the proposed installation to determine whether the tower can support it.
   4. Tower calculations need to be performed per AWWA D100.

Members: Society of Protective Coatings • American Water Works Association • Consulting Engineers Council

B. The revised structural mount analysis for the tank has been reviewed and found to be in order.

C. No changes are required for this comment.

D. This item has been addressed.

E. No changes are required for this comment.

F. No changes are required for this comment.

G. This item has been addressed.

H. This item has been addressed.

I. This item has been addressed.

The design drawings and structural mount analysis for the project are approved. Structural calculations for the tank need to be submitted for further review prior to construction.

After final approval of the design drawings, DIXON has to schedule and lead a preconstruction meeting at the site prior to the start of any work on the project. During the installation portion of the project, DIXON has two installation inspections contracted to be completed for this project.

If you have any questions you can call me at 920-470-0957.

FOR DIXON ENGINEERING, INC.,

Joseph T. Hoban, P.E.
Vice President

c: James Rowley, DIXON
Chris Kreiner, DIXON
Kayla Mulcahy, DIXON

T-Mobile

SITE NUMBER: ML70554A

SITE NAME: HOST WT LAKE GENEVA

SITE TYPE: WATER TANK

JURISDICTION: CITY OF LAKE GENEVA

CITY: LAKE GENEVA

COUNTY: WALWORTH

LOCATION MAP

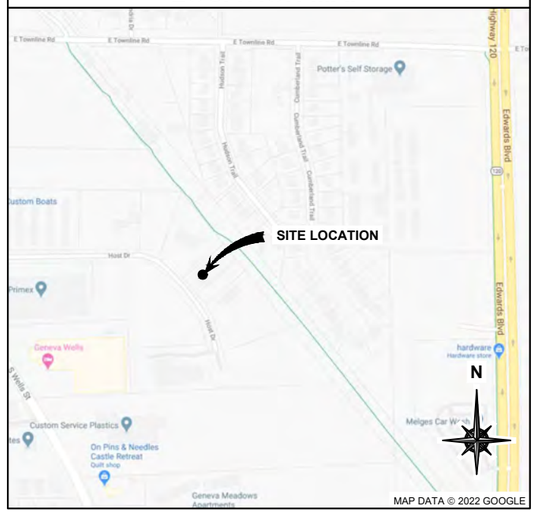

AERIAL MAP

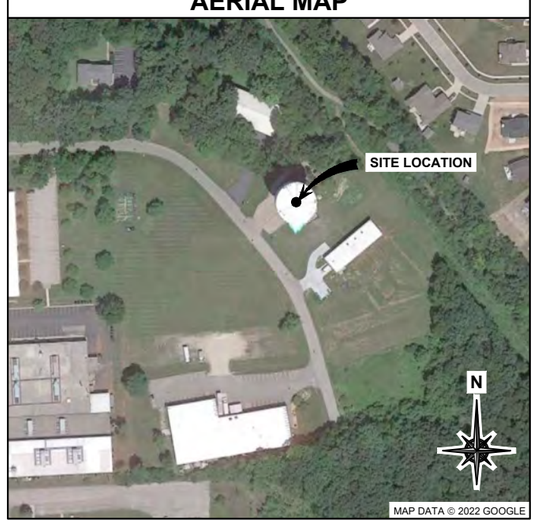

PROJECT DESCRIPTION

NO NEW WATER OR SEWER IS REQUIRED AS FACILITY IS UNMANNED.

EXISTING BUILD OUT:

6 ANTENNAS, 6 RRU MODULES, 4 COVP'S, 3 HCS, 15 COAX, 1 SITE SUPPORT CABINET, 1 BATTERY CABINET, 1 CUBE, 2 SYSTEM MODULES ON CUBE

FINAL BUILD OUT:

6 ANTENNAS, 3 RRU MODULES, 2 TOWER OVP, 2 BREAKOUT BOX, 2 HCS 2.0 TRUNK, 1 SITE SUPPORT CABINET, 1 BATTERY CABINET, 1 SYSTEM MODULE IN SSC, 2 AMIA'S IN SSC

SCOPE OF WORK:

- (1) GSM ESMB TO BE REMOVED AND RETURNED TO WAREHOUSE
- RELOCATE (1) EXISTING FSMF TO SSC. RE-PURPOSE FOR GSM PCS
- (1) LTE FBBC TO BE REMOVED AND RETURNED TO WAREHOUSE
- EXISTING CUBE TO BE REMOVED AND RETURNED TO WAREHOUSE
- EXISTING SSC & EXISTING BATTERY CABINET TO BE REMOVED AND RETURNED TO WAREHOUSE
- (3) EXISTING FRIJ'S TO BE REMOVED AND RETURNED TO WAREHOUSE
- (3) EXISTING FXFC'S TO BE REMOVED AND RETURNED TO WAREHOUSE
- INSTALL (3) NEW AHFIG'S (1 PER SECTOR)
- REPLACE (3) EXISTING ANTENNAS WITH (3) NEW ANTENNAS (1 PER SECTOR)
- UTILIZE (3) EXISTING ANTENNAS (1 PER SECTOR)
- INSTALL NEW RF JUMPERS FOR NEW RRU'S
- (15) EXISTING COAX CABLES TO BE REMOVED
- REMOVE (3) EXISTING HCS CABLES
- REMOVE (1) EXISTING EQUIPMENT COVP
- REMOVE (3) EXISTING ANTENNA COVP'S
- INSTALL (2) NEW TOWER OVP AT EQUIPMENT
- INSTALL (2) NEW BREAKOUT BOX AT ANTENNAS
- INSTALL (2) NEW HCS 2.0 TRUNK CABLE
- RELOCATE (1) EXISTING FSEB TO SSC
- INSTALL (1) NEW SSC AT EQUIPMENT
- INSTALL (1) NEW BBU AT EQUIPMENT
- INSTALL (1) NEW AMIA W/ (1) ASIB CORE MODULE, (3) ABIC CAPACITY MODULES, (1) ASIK CORE MODULE AND (3) ABIL CAPACITY MODULES IN SSC
- INSTALL (1) NEW AMIA W/ (1) ASIB CORE MODULE, (2) ABIA CAPACITY MODULES, (1) ASIK CORE MODULE AND (2) ABIL CAPACITY MODULES IN SSC
- INSTALL NEW CSR IXRe V1

APPLICABLE CODES

BUILDING CODE:

2015 INTERNATIONAL BUILDING CODE

ELECTRICAL CODE:

2017 NATIONAL ELECTRICAL CODE

PROJECT TYPE

ANCHOR

PROJECT LOCATION

COORDINATES (NAD83):

LAT: 42.57920800°
LONG: -88.41719400°

DATA OBTAINED FROM T-MOBILE RFDS

SITE ADDRESS:

1003 HOST DRIVE
LAKE GENEVA, WI 53147
WALWORTH COUNTY

CONTACTS

APPLICANT:

T-MOBILE
1400 OPUS PLACE
DOWNERS GROVE, IL 60515
TEL: T.B.D.
CONTACT: T.B.D.

PROPERTY OWNER:

LAKE GENEVA UTILITY COMMISSION
361 W. MAIN STREET
LAKE GENEVA, WI 53147
TEL: (262) 248-2311
CONTACT: JOSH GAJEWSKI

PROJECT TEAM

A&E:

WT GROUP, LLC
2675 PRATUM AVENUE
HOFFMAN ESTATES, IL 60192
CONTACT: KATIE OLESEN
TEL: (224) 293-6408
FAX: (224) 293-6444

STRUCTURAL ENGINEER:

WT GROUP, LLC
2675 PRATUM AVENUE
HOFFMAN ESTATES, IL 60192
TEL: (224) 293-6333
FAX: (224) 293-6444

SHEET INDEX

SHEET NUMBER:	DESCRIPTION:
T-1	TITLE SHEET
T-2	GENERAL NOTES & SPECIFICATIONS
T-3	GENERAL NOTES & SPECIFICATIONS
C-1	OVERALL SITE PLAN
C-2	EXISTING & NEW SITE PLANS
A-1	ELEVATION
A-2	ANTENNA PLANS & SCHEDULE
A-3	EQUIPMENT SPECIFICATIONS
A-4	EQUIPMENT SPECIFICATIONS
A-5	EQUIPMENT SPECIFICATIONS
A-6	EQUIPMENT SPECIFICATIONS
A-7	EQUIPMENT SPECIFICATIONS
A-8	RF PLUMBING DIAGRAM
E-1	UTILITY PLAN
GR-1	GROUNDING DETAILS
GR-2	GROUNDING DETAILS

APPROVALS

PENDING APPROVAL OF THE JURISDICTION, THE FOLLOWING PARTIES HAVE REVIEWED THE DESIGN WITHIN THEIR FUNCTIONAL RESPONSIBILITIES AND HAVE APPROVED THIS PROJECT FOR CONSTRUCTION. CONTRACTORS MAY NOT START CONSTRUCTION WITHOUT A NOTICE TO PROCEED (NTP).

	PRINT NAME	SIGNATURE	DATE
LANDLORD			
PRECON. MGR			
DEVELOP. MGR			
CONST. INSP.			
A&E MGR.			
RF ENGINEER			
OPERATIONS			
ZONING REP			
UTILITIES			

T-Mobile

WT GROUP
Engineering with Precision, Pace and Passion.
2675 Pratum Avenue | Hoffman Estates, IL 60192
T: 224.293.6333 | F: 224.293.6444
wtengineering.com

© COPYRIGHT 2022 THE W-T GROUP, LLC

WT Group
Engineering • Design • Consulting

NTPWIRELESS
EVERY SITE. EVERY DAY

ML70554A
HOST WT LAKE GENEVA
1003 HOST DRIVE,
LAKE GENEVA, WI 53147

WISCONSIN
JEFF S. GUTOWSKY
35509-006
HOFFMAN ESTATES, IL
PROFESSIONAL ENGINEER

EXPIRES: 07/31/22 SIGNED: 01/10/22

REVISIONS

REV.	ISSUED FOR	DATE	BY
A	FOR CLIENT REVIEW	08/14/20	PS
0	FINAL	09/04/20	KLO
1	REVISION	09/08/20	KLO
2	REVISION	09/10/20	JTB
B	REVISION	06/29/21	SC
3	SA REVISION	07/21/21	KLO
4	REVISION	01/10/22	JTB

AQUATIC \ DESIGN & PROGRAM MANAGEMENT
CIVIL \ TELECOMMUNICATION \ MECHANICAL
PLUMBING \ ELECTRICAL \ LAND SURVEYING
ACCESSIBILITY CONSULTING \ STRUCTURAL

CHECK: JKR
DRAWN: PS
JOB: 2001125T

T-1
TITLE SHEET

GENERAL REQUIREMENTS:

1.1 INTENT

1. THESE SPECIFICATIONS AND CONSTRUCTION DRAWINGS ACCOMPANYING THEM DESCRIBE THE WORK TO BE DONE AND THE MATERIALS TO BE FURNISHED FOR CONSTRUCTION.

2. THE DRAWINGS AND SPECIFICATIONS ARE INTENDED TO BE FULLY EXPLANATORY AND SUPPLEMENTARY. HOWEVER, SHOULD ANYTHING BE SHOWN, INDICATED OR SPECIFIED ON ONE AND NOT THE OTHER, IT SHALL BE DONE THE SAME AS IF SHOWN, INDICATED OR SPECIFIED IN BOTH.

3. THE INTENTION OF THE DOCUMENTS IS TO INCLUDE ALL LABOR AND MATERIALS REASONABLY NECESSARY FOR THE PROPER EXECUTION AND COMPLETION OF THE WORK AS STIPULATED IN THE CONTRACT.

4. THE PURPOSE OF THE SPECIFICATIONS IS TO INTERPRET THE INTENT OF THE DRAWINGS AND TO DESIGNATE THE METHOD OF THE PROCEDURE, TYPE AND QUALITY OF MATERIALS REQUIRED TO COMPLETE THE WORK.

5. MINOR DEVIATIONS FROM THE DESIGN LAYOUT ARE ANTICIPATED AND SHALL BE CONSIDERED AS PART OF THE WORK. NO CHANGES THAT ALTER THE CHARACTER OF THE WORK WILL BE MADE OR PERMITTED BY THE OWNER WITHOUT ISSUING A CHANGE ORDER.

1.2 CONFLICTS

1. THE CONTRACTOR SHALL BE RESPONSIBLE FOR VERIFICATION OF ALL MEASUREMENTS AT THE SITE BEFORE ORDERING ANY MATERIALS OR DOING ANY WORK. NO EXTRA CHARGE OR COMPENSATION SHALL BE ALLOWED DUE TO DIFFERENCE BETWEEN ACTUAL DIMENSIONS AND DIMENSIONS INDICATED ON THE CONSTRUCTION DRAWINGS. ANY SUCH DISCREPANCY IN DIMENSION WHICH MAY BE FOUND SHALL BE SUBMITTED TO THE OWNER FOR CONSIDERATION BEFORE THE CONTRACTOR PROCEEDS WITH THE WORK IN THE AFFECTED AREAS.

2. THE BIDDER, IF AWARDED THE CONTRACT, WILL NOT BE ALLOWED ANY EXTRA COMPENSATION BY REASON OF ANY MATTER OR THING CONCERNING WHICH SUCH BIDDER MIGHT HAVE FULLY INFORMED THEMSELVES PRIOR TO THE BIDDING.

3. NO PLEA OF IGNORANCE OF CONDITIONS THAT EXIST, OR OF DIFFICULTIES OR CONDITIONS THAT MAY BE ENCOUNTERED OR OF ANY OTHER RELEVANT MATTER CONCERNING THE WORK TO BE PERFORMED IN THE EXECUTION OF THE WORK WILL BE ACCEPTED AS AN EXCUSE FOR ANY FAILURE OR OMISSION ON THE PART OF THE CONTRACTOR TO FULFILL EVERY DETAIL OF ALL THE REQUIREMENTS OF THE CONTRACT DOCUMENTS GOVERNING THE WORK.

1.3 CONTRACTS AND WARRANTIES

1. CONTRACTOR IS RESPONSIBLE FOR APPLICATION AND PAYMENT OF CONTRACTOR LICENSES AND BONDS.

1.4 STORAGE

1. ALL MATERIALS MUST BE STORED IN A LEVEL AND DRY FASHION AND IN A MANNER THAT DOES NOT NECESSARILY OBSTRUCT THE FLOW OF OTHER WORK. ANY STORAGE METHOD MUST MEET ALL RECOMMENDATIONS OF THE ASSOCIATED MANUFACTURER.

2. THE BTS MUST BE STORED INSIDE UNTIL THERE IS POWER ON SITE.

1.5 CLEAN UP

1. THE CONTRACTORS SHALL AT ALL TIMES KEEP THE SITE FREE FROM ACCUMULATION OF WASTE MATERIALS OR RUBBISH CAUSED BY THEIR EMPLOYEES AT WORK AND AT THE COMPLETION OF THE WORK, THEY SHALL REMOVE ALL RUBBISH FROM AND ABOUT THE BUILDING AREA, INCLUDING ALL THEIR TOOLS, SCAFFOLDING AND SURPLUS MATERIALS AND SHALL LEAVE THEIR WORK CLEAN AND READY FOR USE.

2. EXTERIOR: VISUALLY INSPECT EXTERIOR SURFACES AND REMOVE ALL TRACES OF SOIL, WASTE MATERIALS, SMUDGES AND OTHER FOREIGN MATTER.

   A. REMOVE ALL TRACES OF SPLASHED MATERIALS FROM ADJACENT SURFACES.

   B. IF NECESSARY TO ACHIEVE A UNIFORM DEGREE OF CLEANLINESS, HOSE DOWN THE EXTERIOR OF THE STRUCTURE.

3. INTERIOR: VISUALLY INSPECT INTERIOR SURFACE AND REMOVE ALL TRACES OF SOIL, WASTE MATERIALS, SMUDGES AND OTHER FOREIGN MATTER FROM WALLS/FLOOR/CEILING.

   A. REMOVE ALL TRACES OF SPLASHED MATERIAL FROM ADJACENT SURFACES.

   B. REMOVE PAINT DROPPINGS, SPOTS, STAINS AND DIRT FROM FINISHED SURFACES.

1.6 CHANGE ORDER PROCEDURE

1. CHANGE ORDERS MAY BE INITIATED BY THE OWNER AND/OR THE CONTRACTOR INVOLVED. THE CONTRACTOR, UPON VERBAL REQUEST FROM THE OWNER SHALL PREPARE A WRITTEN PROPOSAL DESCRIBING THE CHANGE IN WORK OR MATERIALS AND ANY CHANGES IN THE CONTRACT AMOUNT AND PRESENT TO THE OWNER WITHIN 72 HRS FOR APPROVAL. SUBMIT REQUESTS FOR SUBSTITUTIONS IN THE FORM AND IN ACCORDANCE WITH PROCEDURES REQUIRED FOR CHANGE ORDER PROPOSALS. ANY CHANGES IN SCOPE OF WORK OR MATERIALS WHICH ARE PERFORMED BY THE CONTRACTOR WITHOUT A WRITTEN CHANGE ORDER AS DESCRIBED AND APPROVED BY THE OWNER SHALL PLACE FULL RESPONSIBILITY OF THESE ACTIONS ON THE CONTRACTOR.

1.7 RELATED DOCUMENTS AND COORDINATION

1. GENERAL CARPENTRY, ELECTRICAL AND ANTENNA DRAWINGS ARE INTERRELATED. IN PERFORMANCE OF THE WORK, THE CONTRACTOR MUST REFER TO ALL DRAWINGS. ALL COORDINATION TO BE THE RESPONSIBILITY OF THE CONTRACTOR.

1.8 SHOP DRAWINGS

1. CONTRACTOR SHALL SUBMIT SHOP DRAWINGS AS REQUIRED AND LISTED IN THESE SPECIFICATIONS TO THE OWNER FOR APPROVAL.

2. ALL SHOP DRAWINGS SHALL BE REVIEWED, CHECKED AND CORRECTED BY CONTRACTOR PRIOR TO SUBMITTAL TO THE OWNER.

1.9 PRODUCTS AND SUBSTITUTIONS

1. SUBMIT 3 COPIES OF EACH REQUEST FOR SUBSTITUTION. IN EACH REQUEST IDENTIFY THE PRODUCT OR FABRICATION OR INSTALLATION METHOD TO BE REPLACED BY THE SUBSTITUTION. INCLUDE RELATED SPECIFICATION SECTION AND DRAWING NUMBERS AND COMPLETE DOCUMENTATION SHOWING COMPLIANCE WITH THE REQUIREMENTS FOR SUBSTITUTIONS.

2. SUBMIT ALL NECESSARY PRODUCT DATA AND CUT SHEETS WHICH PROPERLY INDICATE AND DESCRIBE THE ITEMS, PRODUCTS AND MATERIALS BEING INSTALLED. THE CONTRACTOR SHALL, IF DEEMED NECESSARY BY THE OWNER SUBMIT ACTUAL SAMPLES TO THE OWNER FOR APPROVAL IN LIEU OF CUT SHEETS.

1.10 QUALITY ASSURANCE

1. ALL WORK SHALL BE IN ACCORDANCE WITH APPLICABLE LOCAL, STATE AND FEDERAL REGULATIONS.

1.11 ADMINISTRATION

1. BEFORE THE COMMENCEMENT OF ANY WORK, THE CONTRACTOR WILL ASSIGN A PROJECT MANAGER WHO WILL ACT AS A SINGLE POINT OF CONTACT FOR ALL PERSONNEL INVOLVED IN THIS PROJECT. THIS PROJECT MANAGER WILL DEVELOP A MASTER SCHEDULE FOR THE PROJECT WHICH WILL BE SUBMITTED TO THE OWNER PRIOR TO THE COMMENCEMENT OF ANY WORK.

2. SUBMIT A BAR TYPE PROGRESS CHART NOT MORE THAN 3 DAYS AFTER THE DATE ESTABLISHED FOR COMMENCEMENT OF THE WORK ON THE SCHEDULE, INDICATING A TIME BAR FOR EACH MAJOR CATEGORY OR UNIT OF WORK TO BE PERFORMED AT SITE, PROPERLY SEQUENCED AND COORDINATED WITH OTHER ELEMENTS OF WORK AND SHOWING COMPLETION OF THE WORK SUFFICIENTLY IN ADVANCE OF THE DATE ESTABLISHED FOR SUBSTANTIAL COMPLETION OF THE WORK.

3. PRIOR TO COMMENCING CONSTRUCTION, THE OWNER SHALL SCHEDULE AN ON-SITE MEETING WITH ALL MAJOR PARTIES. THIS WOULD INCLUDE (THOUGH NOT LIMITED TO) THE OWNER, PROJECT MANAGER, CONTRACTOR, LAND OWNER REPRESENTATIVE, LOCAL TELEPHONE COMPANY, TOWER ERECTION FOREMAN (IF SUBCONTRACTED).

4. CONTRACTOR SHALL BE EQUIPPED WITH SOME MEANS OF CONSTANT COMMUNICATIONS, SUCH AS A MOBILE PHONE OR A BEEPER. THIS EQUIPMENT WILL NOT BE SUPPLIED BY THE OWNER, NOR WILL WIRELESS SERVICE BE ARRANGED.

5. DURING CONSTRUCTION, CONTRACTOR MUST ENSURE THAT EMPLOYEES AND SUBCONTRACTORS WEAR HARD HATS AT ALL TIMES. CONTRACTOR WILL COMPLY WITH ALL SAFETY REQUIREMENTS IN THEIR AGREEMENT.

6. PROVIDE WRITTEN DAILY UPDATES ON SITE PROGRESS TO THE OWNER.

7. COMPLETE INVENTORY OF CONSTRUCTION MATERIALS AND EQUIPMENT IS REQUIRED PRIOR TO START OF CONSTRUCTION.

8. NOTIFY THE OWNER / PROJECT MANAGER IN WRITING NO LESS THAN 48 HOURS IN ADVANCE OF CONCRETE POURS, TOWER ERECTIONS, AND EQUIPMENT CABINET PLACEMENTS.

1.12 INSURANCE AND BONDS

1. CONTRACTOR SHALL AT THEIR OWN EXPENSE CARRY AND MAINTAIN FOR THE DURATION OF THE PROJECT ALL INSURANCE AS REQUIRED AND LISTED AND SHALL NOT COMMENCE WITH THEIR WORK UNTIL THEY HAVE PRESENTED AN ORIGINAL CERTIFICATE OF INSURANCE STATING ALL COVERAGES TO THE OWNER. REFER TO THE MASTER AGREEMENT FOR REQUIRED INSURANCE LIMITS.

2. THE OWNER SHALL BE NAMED AS AN ADDITIONAL INSURED ON ALL POLICIES.

3. CONTRACTOR MUST PROVIDE PROOF OF INSURANCE.

ANTENNA INSTALLATION:

1.1 REQUIREMENTS OF REGULATOR AGENCIES

1. FURNISH U.L. LISTED EQUIPMENT WHERE SUCH LABEL IS AVAILABLE, INSTALL IN CONFORMANCE WITH U.L. STANDARDS WHERE APPLICABLE.

2. INSTALL ANTENNA, ANTENNA CABLES, GROUNDING SYSTEM IN ACCORDANCE WITH DRAWINGS AND SPECIFICATION IN EFFECT AT PROJECT LOCATION AND RECOMMENDATIONS OF STATE AND LOCAL BUILDING CODES, SPECIAL CODES HAVING JURISDICTION OVER SPECIFIC PORTIONS OF WORK. THIS INCLUDES BUT IS NOT LIMITED TO THE FOLLOWING:

   A. TIA - TELECOMMUNICATIONS INDUSTRY ASSOCIATION TIA-222-G. STRUCTURAL STANDARDS FOR STEEL ANTENNA TOWERS AND ANTENNA SUPPORTING STRUCTURES.

   B. FAA - FEDERAL AVIATION ADMINISTRATION ADVISORY CIRCULAR AC 70/7460-IH, OBSTRUCTION MARKING AND LIGHTING.

   C. FCC - FEDERAL COMMUNICATIONS COMMISSION RULES AND REGULATIONS FORM 715, OBSTRUCTION MARKING AND LIGHTING SPECIFICATIONS FOR ANTENNA STRUCTURES AND FORM 715A, HIGH INTENSITY OBSTRUCTION LIGHTING SPECIFICATIONS FOR ANTENNA STRUCTURES.

   D. AISC - AMERICAN INSTITUTE OF STEEL CONSTRUCTION SPECIFICATION FOR STRUCTURAL JOINTS USING ASTM A325 OR A490 BOLTS.

   E. NEC - NATIONAL ELECTRICAL CODE - ON TOWER LIGHTING KITS.

   F. UL - UNDERWRITER'S LABORATORIES APPROVED ELECTRICAL PRODUCTS.

   G. IN ALL CASES, PART 77 OR THE FAA RULES AND PARTS 17 AND 22 OF THE FCC RULES ARE APPLICABLE AND IN THE EVENT OF CONFLICT, SUPERSEDE ANY OTHER STANDARDS OR SPECIFICATIONS.

   H. LIFE SAFETY CODE NFPA -101.

T-Mobile

NTPWIRELESS
EVERY SITE. EVERY DAY

WT GROUP
Engineering with Precision, Pace and Passion.
2675 Prairie Avenue | Hoffman Estates, IL 60192
T 224.293.3315 F 224.293.3444
wtengineering.com

WT Group
Engineering • Design • Consulting

© COPYRIGHT 2022 THE W-T GROUP, LLC

ML70554A
HOST WT LAKE GENEVA
1003 HOST DRIVE,
LAKE GENEVA, WI 53147

WISCONSIN
JEFF S. GUTOWSKY
36509-006
HOFFMAN ESTATES, IL
PROFESSIONAL ENGINEER

EXPIRES: 07/31/22 SIGNED: 01/10/22

REVISIONS

REV.	ISSUED FOR	DATE	BY
A	FOR CLIENT REVIEW	08/14/20	PS
0	FINAL	09/04/20	KLO
1	REVISION	09/08/20	KLO
2	REVISION	09/10/20	JTB
B	REVISION	06/29/21	SC
3	SA REVISION	07/21/21	KLO
4	REVISION	01/10/22	JTB

AQUATIC \ DESIGN & PROGRAM MANAGEMENT
CIVIL \ TELECOMMUNICATION \ MECHANICAL
PLUMBING \ ELECTRICAL \ LAND SURVEYING
ACCESSIBILITY CONSULTING \ STRUCTURAL

CHECK: JKR
DRAWN: PS
JOB: 2001125T

T-2
GENERAL NOTES & SPECIFICATIONS

GENERAL ELECTRIC PROVISION:

1. SUBMITTAL OF BID INDICATES CONTRACTOR IS COGNIZANT OF ALL JOB SITE CONDITIONS AND WORK TO BE PERFORMED UNDER THIS CONTRACT.

2. CONTRACTOR SHALL PERFORM ALL VERIFICATION OBSERVATIONS TEST, AND EXAMINATION WORK PRIOR TO THE ORDERING OF THE ELECTRICAL EQUIPMENT AND THE ACTUAL CONSTRUCTION. CONTRACTOR SHALL ISSUE A WRITTEN NOTICE OF ALL FINDINGS TO THE ARCHITECT LISTING ALL MALFUNCTIONS, FAULTY EQUIPMENT AND DISCREPANCIES.

3. EACH CONDUCTOR OF EVERY SYSTEM SHALL BE PERMANENTLY TAGGED IN EACH PANEL BOARD, PULL BOX, J-BOX, SWITCH BOX, ETC., IN COMPLIANCE WITH OCCUPATIONAL SAFETY AND HEALTH ACT (O.S.H.A.).

4. CONTRACTOR SHALL PROVIDE ALL LABOR, MATERIALS, INSURANCE, EQUIPMENT, INSTALLATION, CONSTRUCTION TOOLS, TRANSPORTATION, ETC., FOR A COMPLETE AND PROPERLY OPERATIVE SYSTEM ENERGIZED THROUGHOUT AND AS INDICATED ON DRAWINGS, AS SPECIFIED HEREIN AND/OR AS OTHERWISE REQUIRED.

5. ALL MATERIALS AND EQUIPMENT SHALL BE NEW AND IN PERFECT CONDITION WHEN INSTALLED AND SHALL BE OF THE BEST GRADE AND OF THE SAME MANUFACTURER THROUGHOUT FOR EACH CLASS OR GROUP OF EQUIPMENT. MATERIALS SHALL BE LISTED "J" WHERE SUBJECT TO SUCH APPROVAL. MATERIALS SHALL MEET WITH APPROVAL OF THE DIVISION OF INDUSTRIAL SAFETY AND ALL GOVERNING BODIES HAVING JURISDICTION. MATERIALS SHALL BE MANUFACTURED IN ACCORDANCE WITH APPLICABLE STANDARDS ESTABLISHED BY ANSI, NEMA AND NBFU.

6. ALL CONDUIT INSTALLED SHALL BE SURFACE MOUNTED OR DIRECT BURIAL UNLESS OTHERWISE NOTED.

7. CONTRACTOR SHALL CARRY OUT THEIR WORK IN ACCORDANCE WITH ALL GOVERNING STATE, COUNTY AND LOCAL CODES AND O.S.H.A.

8. CONTRACTOR TO OBTAIN ALL PERMITS, PAY PERMIT FEES, AND BE RESPONSIBLE FOR SCHEDULING INSPECTIONS.

9. COMPLETE JOB SHALL BE GUARANTEED FOR A PERIOD OF ONE (1) YEAR AFTER THE DATE OF JOB ACCEPTANCE BY OWNER. ANY WORK, MATERIAL OR EQUIPMENT FOUND TO BE FAULTY DURING THAT PERIOD SHALL BE CORRECTED AT ONCE, UPON WRITTEN NOTIFICATION, AT THE EXPENSE OF THE CONTRACTOR.

10. ALL CONDUIT SHALL HAVE A PULL WIRE OR ROPE.

11. PROVIDE PROJECT MANAGER WITH ONE SET OF COMPLETE ELECTRICAL "AS INSTALLED" DRAWINGS AT THE COMPLETION OF THE JOB, SHOWING ACTUAL DIMENSIONS, ROUTINGS AND CIRCUITS.

12. ALL BROCHURES, OPERATING MANUALS, CATALOGS, SHOP DRAWINGS, ETC., SHALL BE TURNED OVER TO THE OWNER AT JOB COMPLETION.

13. USE T-TAP CONNECTIONS ON ALL MULTI-CIRCUITS WITH COMMON NEUTRAL CONDUCTOR FOR LIGHTING FIXTURES.

14. ALL CONDUCTORS SHALL BE COPPER.

15. ALL CIRCUIT BREAKERS, FUSES AND ELECTRICAL EQUIPMENT SHALL HAVE AN INTERRUPTING SHORT CIRCUIT CURRENT TO WHICH THEY MAY BE SUBJECTED, AND A MINIMUM OF 10,000 A.I.C.

16. THE ENTIRE ELECTRICAL INSTALLATION SHALL BE GROUNDED AS REQUIRED BY ALL APPLICABLE CODES.

17. PATCH, REPAIR AND PAINT ANY AREA THAT HAS BEEN DAMAGED IN THE COURSE OF THE ELECTRICAL WORK.

18. PENETRATIONS IN FIRE RATED WALLS SHALL BE FIRE STOPPED IN ACCORDANCE WITH APPLICABLE LOCAL BUILDING CODES.

19. WIRE AND CABLE CONDUCTORS SHALL BE COPPER #12 AWG MINIMUM UNLESS SPECIFICALLY NOTED OTHERWISE ON DRAWINGS.

20. GROUNDING CONDUCTORS SHALL BE SOLID TINNED COPPER UNLESS OTHERWISE NOTED.

21. ALL MATERIALS SHALL BE U.L. LISTED.

22. CONDUIT

    A. RIGID CONDUIT SHALL BE U.L. LABEL GALVANIZED ZINC COATED WITH ZINC INTERIOR AND SHALL BE USED WHEN INSTALLED IN OR UNDER CONCRETE SLABS IN CONTACT WITH THE EARTH, UNDER PUBLIC ROADWAYS, IN MASONRY WALLS OR EXPOSED ON BUILDING EXTERIOR. RIGID CONDUIT IN CONTACT WITH EARTH SHALL BE 1/2 LAPPED WRAPPED WITH HUNTS WRAP PROCESS NO. 3

    B. ELECTRICAL METALLIC TUBING SHALL HAVE U.L. LABEL, FITTING SHALL BE GLAND RING COMPRESSION TYPE. EMT SHALL BE USED ONLY FOR INTERIOR RUNS.

    C. FLEXIBLE METALLIC CONDUIT SHALL HAVE U.L. LISTED LABEL AND MAY BE USED WHERE PERMITTED BY CODE. FITTINGS SHALL BE "JAKE" OR "SQUEEZE" TYPE, SEAL TIGHT FLEXIBLE CONDUIT. ALL CONDUIT SHALL HAVE FULL SIZE EQUIPMENT GROUND WIRE.

    D. CONDUIT RUNS SHALL BE SURFACE MOUNTED UNLESS INDICATED OTHERWISE. CONDUIT INDICATED SHALL RUN PARALLEL OR AT RIGHT ANGLES TO CEILING, FLOOR OR BEAMS. VERIFY EXACT ROUTING OF ALL EXPOSED CONDUIT WITH THE OWNER PRIOR TO INSTALLING. NO HORIZONTAL CONDUITS SHALL BE BELOW 7'-6" A.F.F. NO BX OR ROMEX CABLE IS PERMITTED.

    E. PARALLEL UNDERGROUND CONDUIT SHALL BE PVC SCHEDULE 40 (UNLESS NOTED OTHERWISE) AT A MINIMUM DEPTH OF 30" BELOW GRADE - STACKED UNDERGROUND CONDUIT SHALL BE PVC SCHEDULE 40 (UNLESS NOTED OTHERWISE) AT A MINIMUM DEPTH OF 24" BELOW GRADE.

    F. ABOVE GROUND CONDUIT SHALL BE P.V.C. SCHEDULE 80 (UNLESS NOTED OTHERWISE).

23. ALL ELECTRICAL EQUIPMENT SHALL BE LABELED WITH PERMANENT ENGRAVED PLASTIC LABELS.

24. UPON COMPLETION OF WORK, CONDUCT CONTINUITY, SHORT CIRCUIT, AND FALL OF POTENTIAL GROUND TESTS FOR APPROVAL. SUBMIT TEST REPORTS TO PROJECT MANAGER. CLEAN PREMISES OF ALL DEBRIS RESULTING FROM WORK AND LEAVE WORK IN A COMPLETE AND UNDAMAGED CONDITION.

GENERAL PAINT NOTES:

SURFACE PREPARATION (EXTERIOR & DRY INTERIOR):

- ABRASIVE BLAST CLEAN ALL NEW STEEL COMPONENTS TO AN SSPC-SP6 “COMMERCIAL BLAST CLEANING” CONDITION PRIOR TO APPLICATION OF PRIMER COAT.
- AFTER WELDING OR CUTTING, CLEAN ALL DAMAGED SURFACES IN ACCORDANCE WITH SSPC-SP3 “POWER TOOL CLEANING” CONDITION PRIOR TO APPLICATION OF PRIME COAT.

COATING (EXTERIOR):

- THE EXTERIOR PAINT REPAIR SYSTEM WILL BE ONE PRIME COAT OF TNEMEC SERIES N140, ONE INTERMEDIATE COAT OF TNEMEC SERIES 1095, AND ONE TOPCOAT OF TNEMEC SERIES 1095. PAINT THE EXTERIOR TO MATCH THE EXISTING TOPCOAT COLOR.
- THE THREE-COAT SYSTEM WILL BE APPLIED AT 3.0 - 4.0 MILS PER COAT, TO A THICKNESS OF 9.0 - 12.0 MILS.

COATING (DRY INTERIOR):

- THE DRY INTERIOR PAINT REPAIR SYSTEM WILL BE THREE COATS OF TNEMEC SERIES N140. PAINT THE DRY INTERIOR TO MATCH THE EXISTING TOPCOAT COLOR.
- THE THREE-COAT SYSTEM WILL BE APPLIED AT 3.0 - 4.0 MILS PER COAT, TO A THICKNESS OF 9.0 - 12.0 MILS.

NOTES:

- FOLLOW ALL PAINT MANUFACTURERS' RECOMMENDATIONS WHEN USING THEIR PRODUCTS.

3 4

811

Know what's **below.**
Call before you dig.

T-Mobile

NTPWIRELESS
EVERY SITE. EVERY DAY

ML70554A
HOST WT LAKE GENEVA
1003 HOST DRIVE,
LAKE GENEVA, WI 53147

WT GROUP
Engineering with Precision, Pace and Passion.
2675 Pratum Avenue | Hoffman Estates, IL 60192
T 224.293.3315 F 224.293.0444
wtengineering.com

WT Group
Engineering • Design • Consulting

©COPYRIGHT 2022 THE W-T GROUP, LLC

WISCONSIN
JEFF S. GUTOWSKY
36509-006
HOFFMAN ESTATES, IL
PROFESSIONAL ENGINEER

EXPIRES: 07/31/22 SIGNED: 01/10/22

REVISIONS

REV.	ISSUED FOR	DATE	BY
A	FOR CLIENT REVIEW	08/14/20	PS
0	FINAL	09/04/20	KLO
1	REVISION	09/08/20	KLO
2	REVISION	09/10/20	JTB
B	REVISION	06/29/21	SC
3	SA REVISION	07/21/21	KLO
4	REVISION	01/10/22	JTB

AQUATIC \ DESIGN & PROGRAM MANAGEMENT
CIVIL \ TELECOMMUNICATION \ MECHANICAL
PLUMBING \ ELECTRICAL \ LAND SURVEYING
ACCESSIBILITY CONSULTING \ STRUCTURAL

CHECK: JKR
DRAWN: PS
JOB: 2001125T

T-3
GENERAL NOTES & SPECIFICATIONS

IMPORTANT SITE NOTES:

1. CONTRACTOR WILL NOT START CONSTRUCTION UNTIL AFTER THEY HAVE RECEIVED THE PRE-CON PACKAGE AND HAVE A PRE-CON WALK WITH THE PROJECT MANAGER.
2. CONTRACTOR TO HIRE PUBLIC (811) AND PRIVATE LOCATING SERVICE IN ORDER TO LOCATE AND PROTECT ALL SURFACE UTILITIES. DO NOT SCALE OFF THESE PLANS FOR ANY BELOW GRADE UTILITIES
3. CONTRACTOR SHALL VERIFY ALL EXISTING BURIED AND OVERHEAD UTILITIES PRIOR TO EXCAVATION. CONTRACTOR SHALL REPAIR ALL DAMAGED UTILITIES AT HIS OWN COST AND COORDINATE ANY REPAIRS WITH RESPECTIVE UTILITY COMPANY.
4. CONTRACTOR TO VERIFY ALL HEIGHTS AND AZIMUTHS IN FIELD PRIOR TO CONSTRUCTION. CONTRACTOR SHALL NOTIFY T-MOBILE AND ENGINEERING FIRM OF ANY DISCREPANCIES BEFORE PROCEEDING.
5. CONTRACTOR SHALL RESTORE AND REPAIR ANY DAMAGED AREAS CAUSED BY CONSTRUCTION.

N

OVERALL SITE PLAN

SCALE: 1" = 60'-0"

1

T-Mobile

WT GROUP
Engineering with Precision, Pace and Passion.
2675 Pratum Avenue | Hoffman Estates, IL 60192
T: 224.293.3151 F: 224.293.3444
wtengineering.com

©COPYRIGHT 2022 THE W-T GROUP, LLC

WT Group
Engineering • Design • Consulting

NTPWIRELESS
EVERY SITE. EVERY DAY

ML70554A
HOST WT LAKE GENEVA
1003 HOST DRIVE,
LAKE GENEVA, WI 53147

WISCONSIN
JEFF S. GUTOWSKY
36509-006
HOFFMAN ESTATES, IL
PROFESSIONAL ENGINEER

EXPIRES: 07/31/22 SIGNED: 01/10/22

REVISIONS

REV.	ISSUED FOR	DATE	BY
A	FOR CLIENT REVIEW	08/14/20	PS
0	FINAL	09/04/20	KLO
1	REVISION	09/08/20	KLO
2	REVISION	09/10/20	JTB
B	REVISION	06/29/21	SC
3	SA REVISION	07/21/21	KLO
4	REVISION	01/10/22	JTB

AQUATIC \ DESIGN & PROGRAM MANAGEMENT
CIVIL \ TELECOMMUNICATION \ MECHANICAL
PLUMBING \ ELECTRICAL \ LAND SURVEYING
ACCESSIBILITY CONSULTING \ STRUCTURAL

CHECK: JKR
DRAWN: PS
JOB: 2001125T

C-1
OVERALL SITE PLAN

LEGEND

- EXISTING EQUIPMENT
- REMOVED EQUIPMENT
- RELOCATED EQUIPMENT
- NEW EQUIPMENT

NOTE:
RE-ROUTE GPS CABLE THROUGH WIRE TROUGH TO SSC.

NOTES:

1. NEW TOWER OVP & NEW HCS 2.0 TRUNK TO FEED (3) NEW AHFIG'S.
2. NEW TOWER OVP & NEW HCS 2.0 TRUNK TO FEED (3) NEW AEHC ANTENNAS

SEE A-8 FOR RF PLUMBING DIAGRAM.

NOTE:
SSC USED BATTERIES WITH CONNECTION HARDWARE TO BE RELOCATED INSIDE NEW BBU.

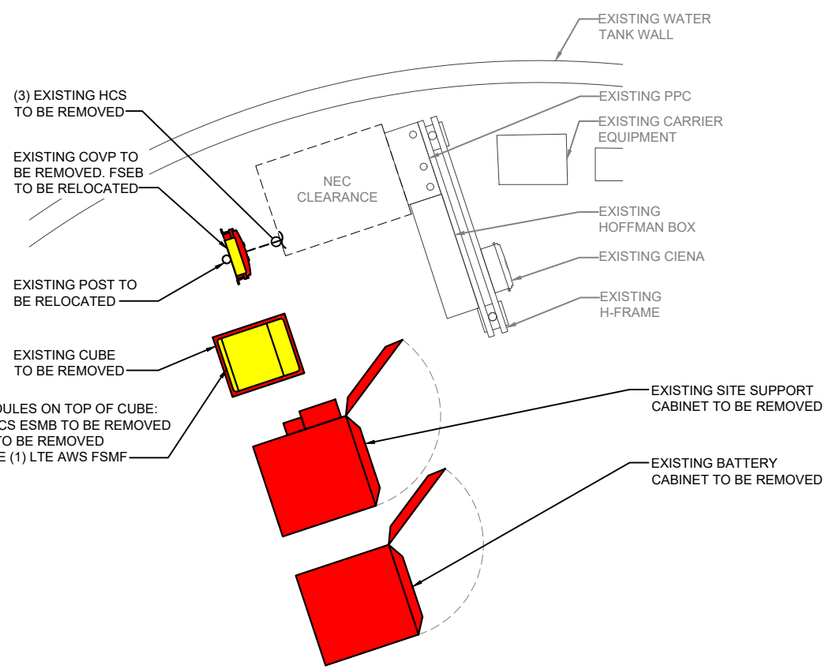

N

EXISTING SITE PLAN

SCALE: 1/4" = 1'-0"

1

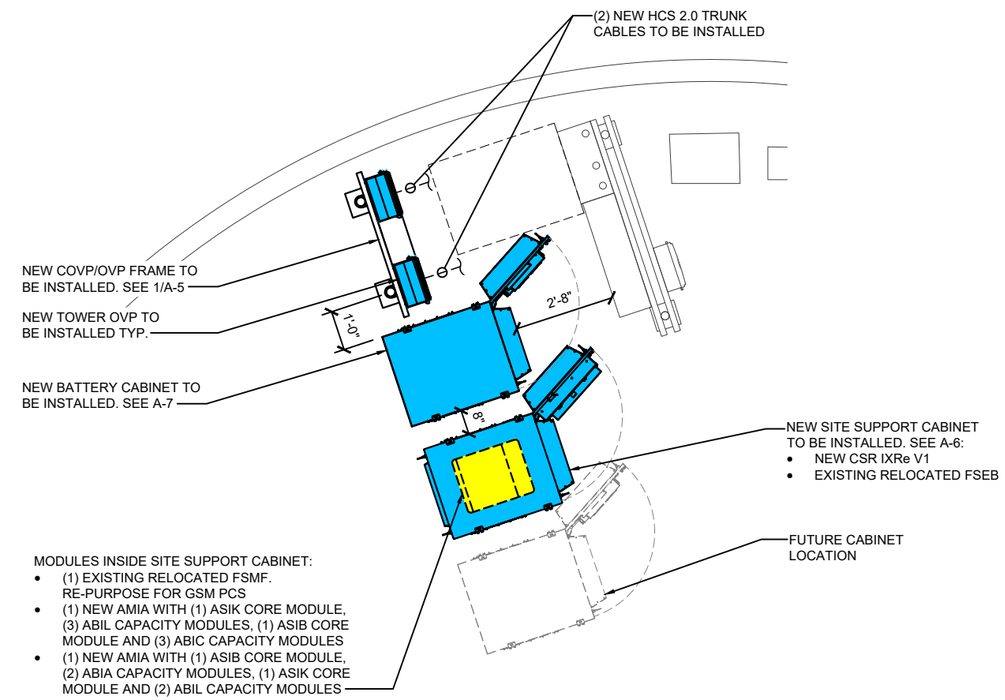

N

NEW SITE PLAN

SCALE: 1/4" = 1'-0"

2

T-Mobile

NTPWIRELESS
EVERY SITE. EVERY DAY

WT GROUP
Engineering with Precision, Pace and Passion.
2675 Prairie Avenue | Hoffman Estates, IL 60192
T 224.293.3311 F 224.293.3444
wtengineering.com

© COPYRIGHT 2022 THE W-T GROUP, LLC

WT Group
Engineering • Design • Consulting

ML70554A
HOST WT LAKE GENEVA
1003 HOST DRIVE,
LAKE GENEVA, WI 53147

WISCONSIN
JEFF S. GLITOWSKY
36509-006
HOFFMAN ESTATES, IL
PROFESSIONAL ENGINEER

EXPIRES: 07/31/22 SIGNED: 01/10/22

REVISIONS

REV.	ISSUED FOR	DATE	BY
A	FOR CLIENT REVIEW	08/14/20	PS
0	FINAL	09/04/20	KLO
1	REVISION	09/08/20	KLO
2	REVISION	09/10/20	JTB
B	REVISION	06/29/21	SC
3	SA REVISION	07/21/21	KLO
4	REVISION	01/10/22	JTB

AQUATIC \ DESIGN & PROGRAM MANAGEMENT
CIVIL \ TELECOMMUNICATION \ MECHANICAL
PLUMBING \ ELECTRICAL \ LAND SURVEYING
ACCESSIBILITY CONSULTING \ STRUCTURAL

CHECK: JKR
DRAWN: PS
JOB: 2001125T

C-2
EXISTING & NEW SITE PLANS

IMPORTANT SITE NOTES:

1. CONTRACTOR SHALL BE RESPONSIBLE FOR VERIFYING FINAL RF CONFIGURATION AND NOTIFY T-MOBILE AND ENGINEERING FIRM WITH ANY DISCREPANCIES.
2. CONTRACTOR SHALL VERIFY ALL FINAL CONNECTION LOCATIONS WITH T-MOBILE ENGINEER, RF ENGINEER, AND NET-OPS PRIOR TO INSTALLATION.
3. CONTRACTOR TO USE PROPER TORQUE WRENCH WHEN INSTALLING AND TIGHTENING CONNECTORS TO INSURE PROPER FIT.
4. CONTRACTOR TO ARRANGE NEW MODULES/EQUIPMENT TO AVOID INTERFERING WITH SAFETY CLIMB.

NOTE:
EXISTING CABLES RUNNING UP INTERIOR OF TOWER.

NOTE:
A STRUCTURAL ANALYSIS OF THE TOWER OR STRUCTURE HAS BEEN COMPLETED BY THE W-T GROUP, LLC ON 01/07/2022. THE LOCATION AND MOUNTING SHOWN IN THE STRUCTURAL ANALYSIS SHALL SUPERSEDE THESE DRAWINGS.

NOTE:
A STRUCTURAL ANALYSIS OF THE ANTENNA MOUNT HAS BEEN COMPLETED BY THE W-T GROUP, LLC ON 01/07/2022. THE LOCATION AND MOUNTING OF THE ANTENNAS SHOWN IN THE STRUCTURAL ANALYSIS SHALL SUPERSEDE THESE DRAWINGS.

LEGEND

- EXISTING EQUIPMENT
- REMOVED EQUIPMENT
- RELOCATED EQUIPMENT
- NEW EQUIPMENT

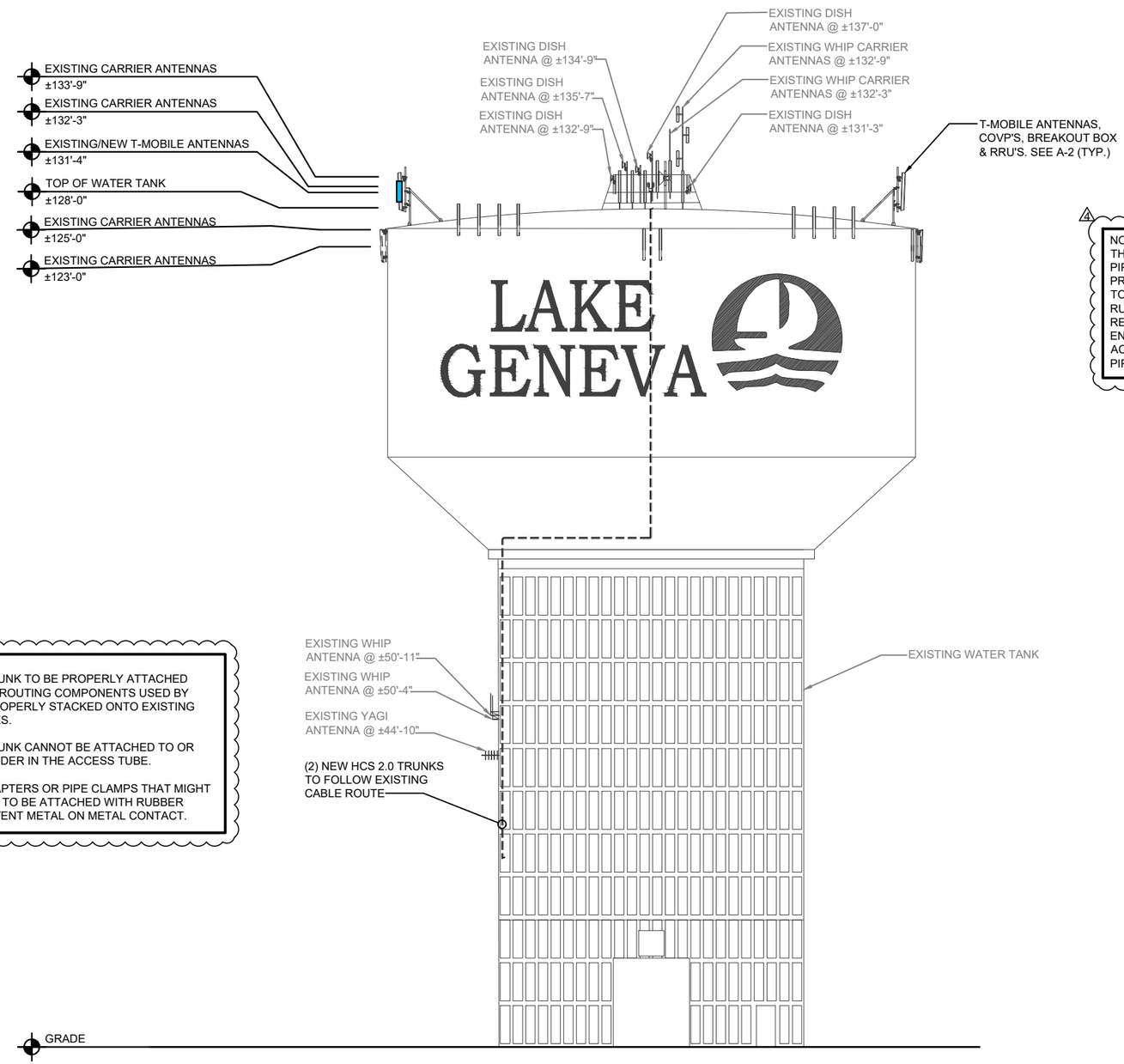

4

NOTE:
THE EXTERIOR ENDS OF THE T-MOBILE PENETRATION PIPES AT THE TOP OF THE ACCESS TUBE NEED TO BE PROPERLY SEALED. THE PENETRATION PIPES AT THE TOP OF THE ACCESS TUBE NEED TO BE SEALED WITH RUBBER BOOT ASSEMBLIES AND/OR WEATHER RESISTANT CAULK TO A DEPTH OF 2" ON THE EXTERIOR ENDS. SPRAY FOAM, BUYTL, AND TAP ARE NOT ACCEPTABLE ALTERNATIVES. UNUSED PENETRATION PIPES NEED TO BE SEALED WITH SOLID RUBBER BOOTS.

3

NOTES:
1. NEW HCS 2.0 TRUNK TO BE PROPERLY ATTACHED ONTO EXISTING ROUTING COMPONENTS USED BY T-MOBILE OR PROPERLY STACKED ONTO EXISTING T-MOBILE CABLES.
2. NEW HCS 2.0 TRUNK CANNOT BE ATTACHED TO OR BEHIND THE LADDER IN THE ACCESS TUBE.
3. NEW ANGLE ADAPTERS OR PIPE CLAMPS THAT MIGHT BE ADDED NEED TO BE ATTACHED WITH RUBBER STRIPS TO PREVENT METAL ON METAL CONTACT.

ELEVATION

SCALE: 1" = 20'-0"

1

T-Mobile

WT GROUP
Engineering with Precision, Pace and Passion.
2675 Prairie Avenue | Hoffman Estates, IL 60192
T: 224.293.3151 F: 224.293.3044
wtengineering.com

© COPYRIGHT 2022 THE W-T GROUP, LLC

WT Group
Engineering • Design • Consulting

NTPWIRELESS
EVERY SITE. EVERY DAY

ML70554A
HOST WT LAKE GENEVA
1003 HOST DRIVE,
LAKE GENEVA, WI 53147

WISCONSIN
JEFF S. GUTOWSKY
36509-006
HOFFMAN ESTATES, IL
PROFESSIONAL ENGINEER

EXPIRES: 07/31/22 SIGNED: 01/10/22

REVISIONS

REV.	ISSUED FOR	DATE	BY
A	FOR CLIENT REVIEW	08/14/20	PS
0	FINAL	09/04/20	KLO
1	REVISION	09/08/20	KLO
2	REVISION	09/10/20	JTB
B	REVISION	06/29/21	SC
3	SA REVISION	07/21/21	KLO
4	REVISION	01/10/22	JTB

AQUATIC \ DESIGN & PROGRAM MANAGEMENT
CIVIL \ TELECOMMUNICATION \ MECHANICAL
PLUMBING \ ELECTRICAL \ LAND SURVEYING
ACCESSIBILITY CONSULTING \ STRUCTURAL

CHECK: JKR
DRAWN: PS
JOB: 2001125T

A-1
ELEVATION

LEGEND

- EXISTING EQUIPMENT
- REMOVED EQUIPMENT
- RELOCATED EQUIPMENT
- NEW EQUIPMENT

ANTENNA & CABLE SCHEDULE

SECTOR	ALPHA		BETA		GAMMA	
LOCATION	A-2	A-1	B-2	B-1	C-2	C-1
TECHNOLOGY	LTE 5G B41	LTE-GSM PCS/ LTE AWS/ N1900/N2100	LTE 5G B41	LTE-GSM PCS/ LTE AWS/ N1900/N2100	LTE 5G B41	LTE-GSM PCS/ LTE AWS/ N1900/N2100
AZIMUTH	120°		230°		330°	
RAD CENTER	±131'-4"		±131'-4"		±131'-4"	
COLOR CODING	RED	RED (1-4)	GREEN	GREEN (1-4)	BLUE	BLUE (1-4)
MODEL #	AEHC (ACTIVE ANTENNA-MASSIVE MIMO)	ANDREW-TMBXX-6516-A2M	AEHC (ACTIVE ANTENNA-MASSIVE MIMO)	ANDREW-TMBXX-6516-A2M	AEHC (ACTIVE ANTENNA-MASSIVE MIMO)	ANDREW-TMBXX-6516-A2M
MECHANICAL DOWNTILT	0	0	0	0	0	0
ELECTRICAL DOWNTILT	-	2/2	-	2/2	-	2/2
RRU TYPE	AEHC (INTEGRATED)	AHFIG	AEHC (INTEGRATED)	AHFIG	AEHC (INTEGRATED)	AHFIG
HCS DIA. & TYPE	HCS 2.0 TRUNK	SHARED HCS 2.0 TRUNK	SHARED HCS 2.0 TRUNK	SHARED HCS 2.0 TRUNK	HCS 2.0 TRUNK	SHARED HCS 2.0 TRUNK
HCS ACTUAL LENGTH	±145'-0"	-	-	-	±145'-0"	-
HCS FACTORY LENGTH	±150'-0"	-	-	-	±150'-0"	-
JUMPER TYPE FROM COVP/BREAKOUT BOX TO RRU/ANTENNA	HCS 2.0 JUMPER	HYBRID JUMPER	HCS 2.0 JUMPER	HYBRID JUMPER	HCS 2.0 JUMPER	HYBRID JUMPER
JUMPER LENGTH	±15-0"	±90'-0"	±90'-0"	±90'-0"	±90'-0"	±15'-0"
JUMPER TYPE FROM RRU TO ANTENNA	-	RF JUMPER	-	RF JUMPER	-	RF JUMPER
JUMPER LENGTH	-	±6'-0"	-	±6'-0"	-	±6'-0"

NOTE:
A STRUCTURAL ANALYSIS OF THE TOWER OR STRUCTURE HAS BEEN COMPLETED BY THE W-T GROUP, LLC ON 01/07/2022. THE LOCATION AND MOUNTING SHOWN IN THE STRUCTURAL ANALYSIS SHALL SUPERSEDE THESE DRAWINGS.

NOTE:
A STRUCTURAL ANALYSIS OF THE ANTENNA MOUNT HAS BEEN COMPLETED BY THE W-T GROUP, LLC ON 01/07/2022. THE LOCATION AND MOUNTING OF THE ANTENNAS SHOWN IN THE STRUCTURAL ANALYSIS SHALL SUPERSEDE THESE DRAWINGS.

NOTE:
ANTENNA INFORMATION OBTAINED FROM T-MOBILE RF DATA CONFIGURATION SHEET DATED 07/06/2021. CONTRACTOR TO OBTAIN THE MOST CURRENT & FINAL RFDS FROM T-MOBILE FOR AZIMUTH SETTINGS PRIOR TO CONSTRUCTION

4

NOTE:
THE EXTERIOR ENDS OF THE T-MOBILE PENETRATION PIPES AT THE TOP OF THE ACCESS TUBE NEED TO BE PROPERLY SEALED. THE PENETRATION PIPES AT THE TOP OF THE ACCESS TUBE NEED TO BE SEALED WITH RUBBER BOOT ASSEMBLIES AND/OR WEATHER RESISTANT CAULK TO A DEPTH OF 2" ON THE EXTERIOR ENDS. SPRAY FOAM, BUYTL, AND TAP ARE NOT ACCEPTABLE ALTERNATIVES. UNUSED PENETRATION PIPES NEED TO BE SEALED WITH SOLID RUBBER BOOTS.

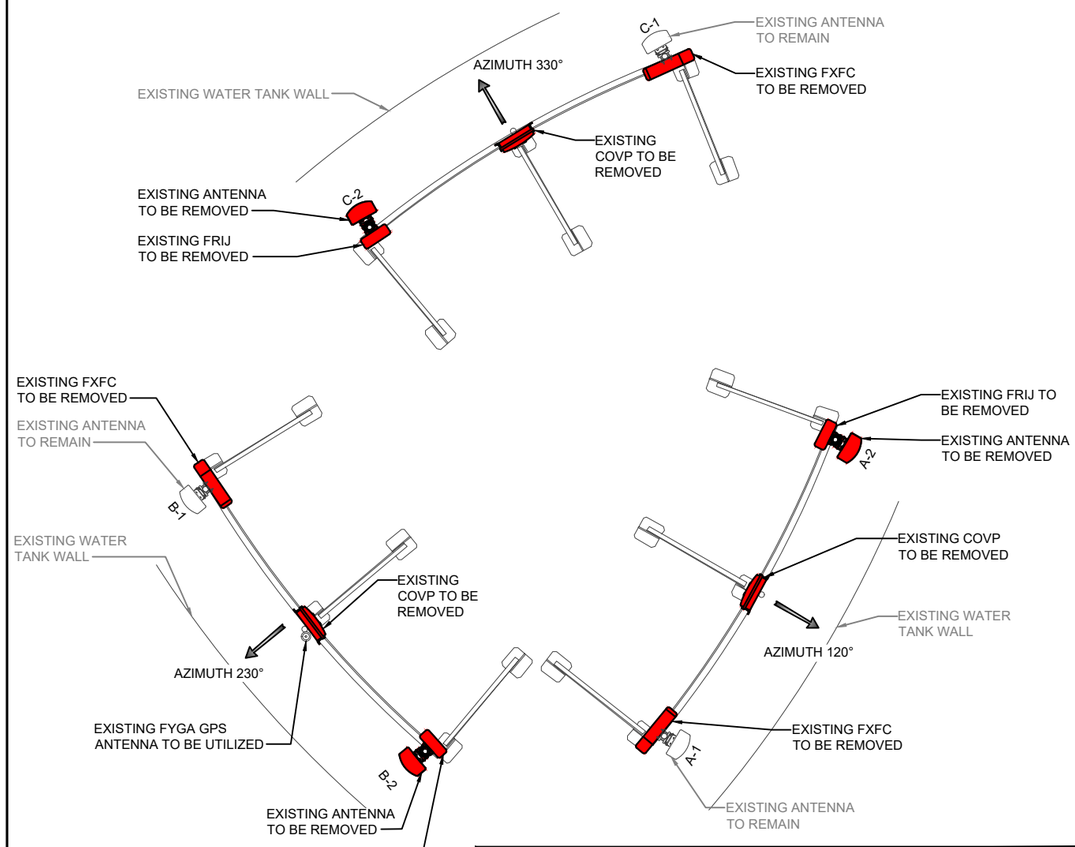

EXISTING ANTENNA PLAN

SCALE: NONE

1

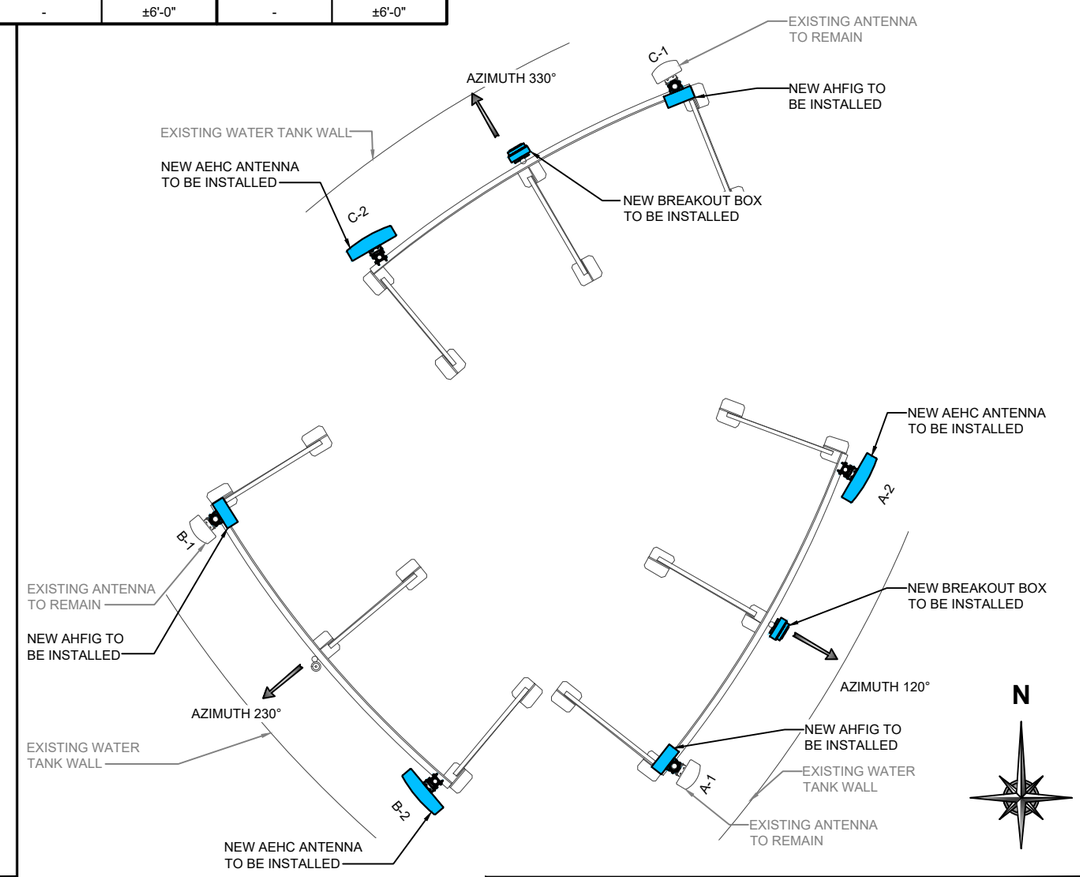

NEW ANTENNA PLAN

SCALE: NONE

2

T-Mobile

WT GROUP
Engineering with Precision, Pace and Passion.
2675 Prairie Avenue | Hoffman Estates, IL 60192
T: 224.293.3311 F: 224.293.3444
wtengineering.com

©COPYRIGHT 2022 THE W-T GROUP, LLC

WT Group
Engineering • Design • Consulting

NTPWIRELESS
EVERY SITE. EVERY DAY

ML70554A
HOST WT LAKE GENEVA
1003 HOST DRIVE,
LAKE GENEVA, WI 53147

WISCONSIN
JEFF S. GUTOWSKY
35509-006
HOFFMAN ESTATES, IL
PROFESSIONAL ENGINEER

EXPIRES: 07/31/22 SIGNED: 01/10/22

REVISIONS

REV.	ISSUED FOR	DATE	BY
A	FOR CLIENT REVIEW	08/14/20	PS
0	FINAL	09/04/20	KLO
1	REVISION	09/08/20	KLO
2	REVISION	09/10/20	JTB
B	REVISION	06/29/21	SC
3	SA REVISION	07/21/21	KLO
4	REVISION	01/10/22	JTB

AQUATIC \ DESIGN & PROGRAM MANAGEMENT
CIVIL \ TELECOMMUNICATION \ MECHANICAL
PLUMBING \ ELECTRICAL \ LAND SURVEYING
ACCESSIBILITY CONSULTING \ STRUCTURAL

CHECK: JKR
DRAWN: PS
JOB: 2001125T

A-2
ANTENNA PLANS & SCHEDULE

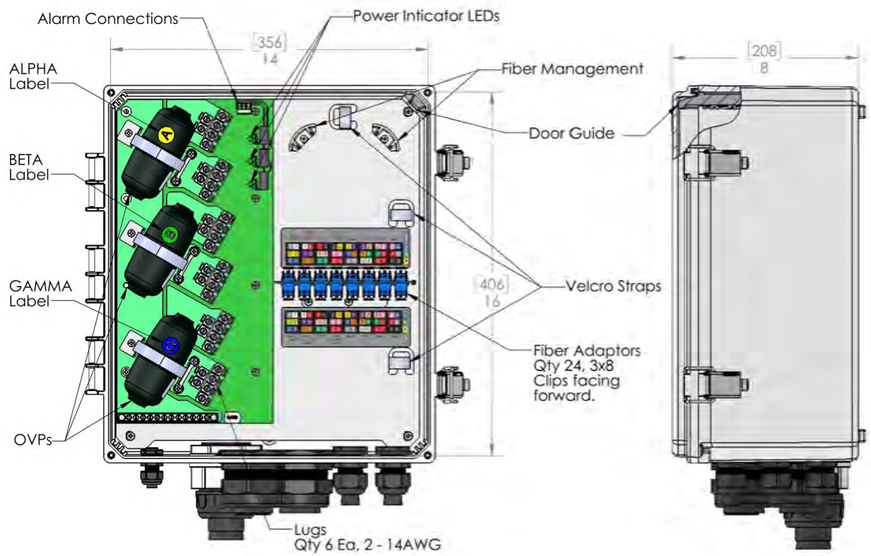

TOWER OVP DETAIL

SCALE: NONE

1

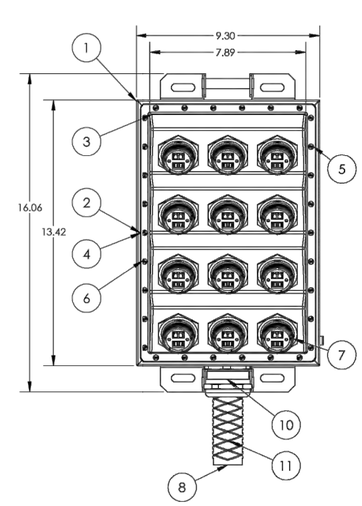

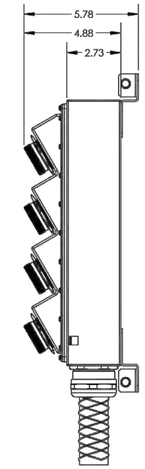

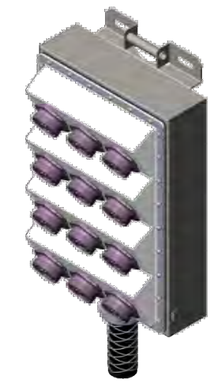

ITEM NO.	PART NUMBER	DESCRIPTION	AC-DIST08-6IP-SHIR/QTY.
1	AC-DIST05-24IP-DC	IP SHEETMETAL BOX	1
2	AC-GKT05-FB-HICAP	GASKET EPDM	1
3	AC-FB-FRONT-4STEP-3CON	HYBRID MODULE INCLINE MOUNT THERMO SHELL	1
4	AC-STR05-HICAP	METAL O-RING	1
5	Regular LW 0.125	WASHER	30
6	3GMRB06058	TAMPERED PROOF #6-32 SCREW	30
7	CF-970850-101_106_W/LC	JAM NUT RECEPTACLE	12
8	ASU9325TYP02	HYBRID CABLE HI-CAP	1
9	6000428	LOCKNUT FOR CABLE GLAND	1
10	4220342	CABLE GLAND	1
11	HOIST GRIP	CABLE HOIST GRIP	1

HYBRID CABLE HI-CAP BREAKOUT BOX

SCALE: NONE

2

Coax Color Coding

- Antennas will be labeled (back of antenna view) Right to left 1 - X ports
- Coax/Jumper lines will be identified by sector color and by number of bands around the coax/jumper

Sector A	Red
Sector B	Green
Sector C	Blue
Sector D	Yellow
Sector E	White
Sector F	Purple
LMU	Brown + Sector Color Bands (1,2)
Fiber ID	Gray
Unused Coax	Pink
Microwave	Orange
PWE T-1's + GPS Downlink cable	ID w/Label Maker

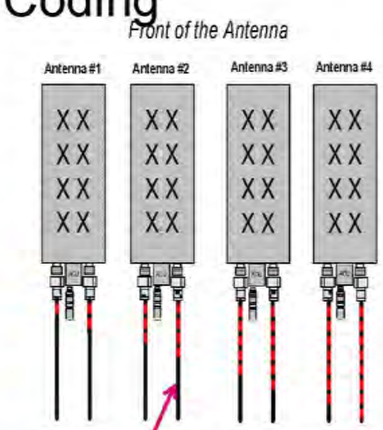

- Example – Coax with *four bands* of *RED* tape will represent *Alpha sector* and *the 4th port of antenna*.

COAX COLOR CODING

SCALE: NONE

3

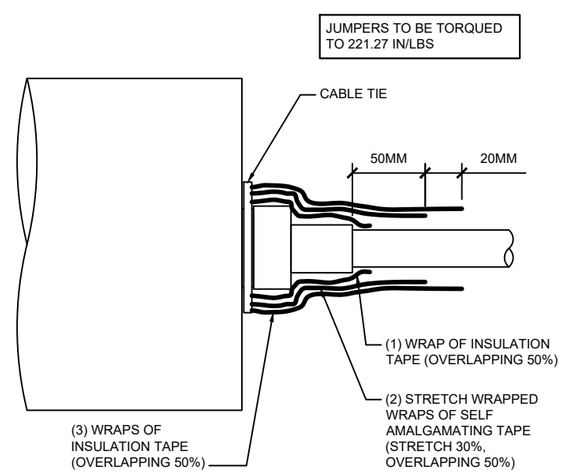

RF JUMPER CONNECTION DETAIL

SCALE: NONE

4

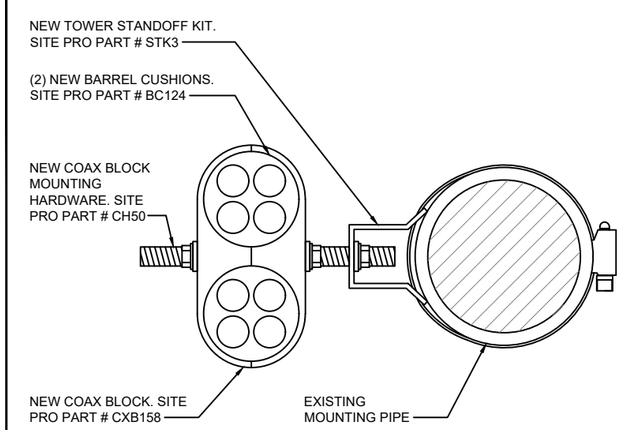

RF JUMPER MOUNTING DETAIL

SCALE: NONE

5

T-Mobile

NTPWIRELESS
EVERY SITE. EVERY DAY

ML70554A
HOST WT LAKE GENEVA
1003 HOST DRIVE,
LAKE GENEVA, WI 53147

WT GROUP
Engineering with Precision, Pace and Passion.
2675 Prairie Avenue | Hoffman Estates, IL 60192
T: 224.293.3315 F: 224.293.0444
wtengineering.com

©COPYRIGHT 2022 THE W-T GROUP, LLC

WT Group
Engineering • Design • Consulting

WISCONSIN
JEFF S. GUTOWSKY
36509-006
HOFFMAN ESTATES, IL
PROFESSIONAL ENGINEER

EXPIRES: 07/31/22 SIGNED: 01/10/22

REVISIONS

REV.	ISSUED FOR	DATE	BY
A	FOR CLIENT REVIEW	08/14/20	PS
0	FINAL	09/04/20	KLO
1	REVISION	09/08/20	KLO
2	REVISION	09/10/20	JTB
B	REVISION	06/29/21	SC
3	SA REVISION	07/21/21	KLO
4	REVISION	01/10/22	JTB

AQUATIC \ DESIGN & PROGRAM MANAGEMENT
CIVIL \ TELECOMMUNICATION \ MECHANICAL
PLUMBING \ ELECTRICAL \ LAND SURVEYING
ACCESSIBILITY CONSULTING \ STRUCTURAL

CHECK: JKR
DRAWN: PS
JOB: 2001125T

A-3
EQUIPMENT SPECIFICATIONS

Nokia AirScale System Module Indoor consists of the following items:

- One Nokia AirScale Subrack (AMIA), including backplane for high bandwidth connectivity between processing plug-in units
- One or two Nokia AirScale Common (ASIA) plug-in units for transport interfacing and for centralized processing
- Up to six Nokia AirScale Capacity (ABIA) plug-in units for baseband processing and for optical interfaces with radio units

Weight	Empty: 5.1 kg (11.2 lb) With dummy panels: 6.8 kg (15 lb) With all units: 23.9 kg (52.7 lb)

The AirScale Subrack (AMIA) has a 3U height and fits into a standard 19 in. rack. Multiple subracks can be stacked on top of each other. The indoor subrack includes fans, a backplane for internal communication, and the DC-feed. The direction of the cooling air can be changed by rotating fans. The default direction is front-to-back.

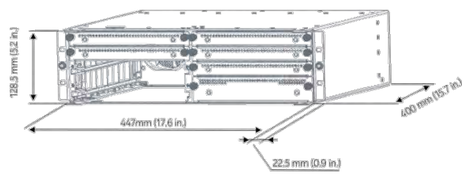

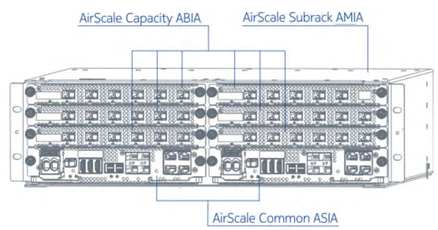

AMIA DETAIL

SCALE: NONE

1

NOT USED

SCALE: NONE

2

Instantaneous BW (DL/UL)	65MHz on Band 25, 80MHz on Band 66
Supported Modulation schemes	up to 64QAM (UL) and up to 256QAM (DL)
Supported bandwidths	LTE 1.4,3,5,10,15,20 MHz
No. of ports	4T4R
Output Power	80 W for Band 25 and 40 W for Band 66 (Total Power is 480W)
DC connector	Terminal block
Optical Fiber connector	2 x 9.8Gbps CPRI, R2CT IP seal
RF Connector	4.3-10+
AISG	AISG on all ports, DC on ANT1 and ANT3
Dimensions (H x W x D) in	27.3 x 12.1 x 5.2
Weight lbs	70.5 without cover
HW/SW Availability	Available now – SRAN19A
5G NR Support	YES
NB-IoT Support	YES (in band, guardband, standalone)

AHFIG DETAIL

SCALE: NONE

3

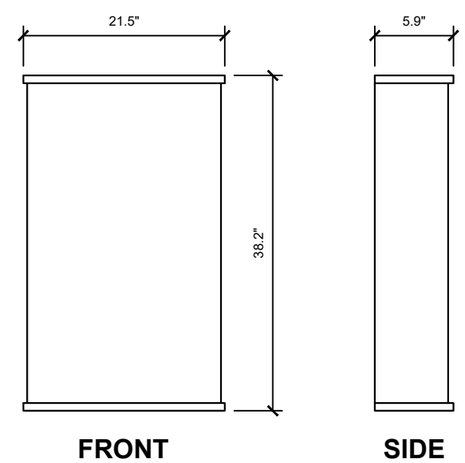

NOKIA AEHC

SIZE (L x W x D): 38.2" x 21.5" x 5.9"

WEIGHT (W/O MOUNTING KIT): 108.0 LBS

ANTENNA DETAIL

SCALE: NONE

4

T-Mobile

NTPWIRELESS EVERY SITE. EVERY DAY

ML70554A
HOST WT LAKE GENEVA
1003 HOST DRIVE,
LAKE GENEVA, WI 53147

WT GROUP
Engineering with Precision, Pace and Passion.
2675 Prairie Avenue | Hoffman Estates, IL 60192
T 224.293.5321 | F 224.293.5444
wtengineering.com

© COPYRIGHT 2022 THE W-T GROUP, LLC

WT Group
Engineering • Design • Consulting

WISCONSIN JEFF S. GUTOWSKY 36509-006 HOFFMAN ESTATES, IL PROFESSIONAL ENGINEER

EXPIRES: 07/31/22 SIGNED: 01/10/22

REVISIONS

REV.	ISSUED FOR	DATE	BY
A	FOR CLIENT REVIEW	08/14/20	PS
0	FINAL	09/04/20	KLO
1	REVISION	09/08/20	KLO
2	REVISION	09/10/20	JTB
B	REVISION	06/29/21	SC
3	SA REVISION	07/21/21	KLO
4	REVISION	01/10/22	JTB

AQUATIC \ DESIGN & PROGRAM MANAGEMENT
CIVIL \ TELECOMMUNICATION \ MECHANICAL
PLUMBING \ ELECTRICAL \ LAND SURVEYING
ACCESSIBILITY CONSULTING \ STRUCTURAL

CHECK: JKR
DRAWN: PS
JOB: 2001125T

A-4
EQUIPMENT SPECIFICATIONS

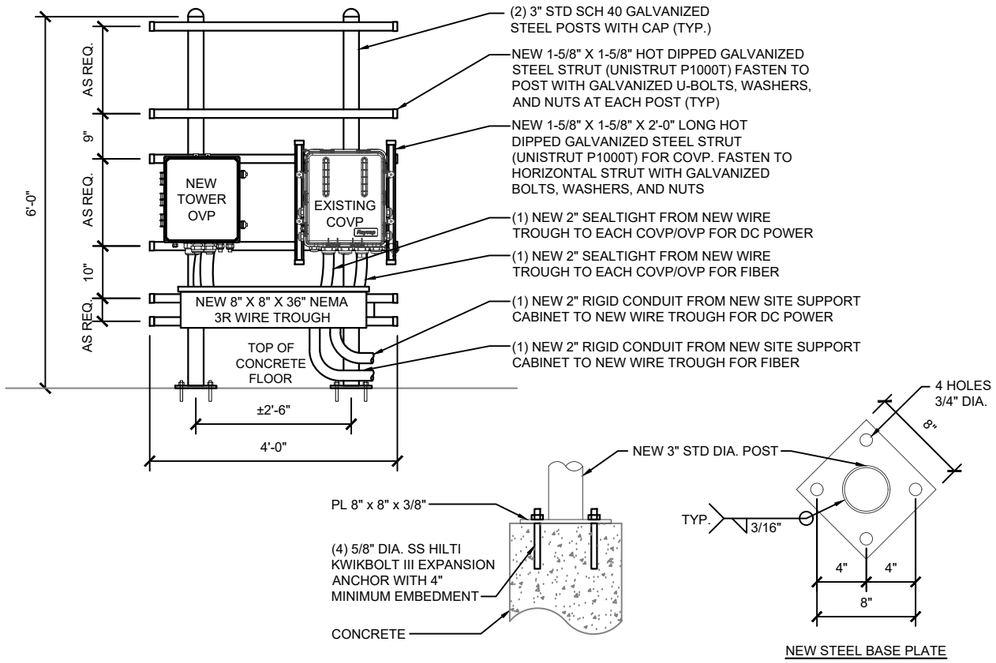

COVP/OVP FRAME DETAIL

SCALE: NONE

1

NOT USED

SCALE: NONE

2

NOT USED

SCALE: NONE

3

NOT USED

SCALE: NONE

4

T-Mobile

NTPWIRELESS
EVERY SITE. EVERY DAY

ML70554A
HOST WT LAKE GENEVA
1003 HOST DRIVE,
LAKE GENEVA, WI 53147

WT GROUP
Engineering with Precision, Pace and Passion.
2675 Pratum Avenue | Hoffman Estates, IL 60192
T 224.293.3315 F 224.293.0444
wtengineering.com

©COPYRIGHT 2022 THE W-T GROUP, LLC

WT Group
Engineering • Design • Consulting

WISCONSIN
JEFF S. GUTOWSKY
36509-006
HOFFMAN ESTATES, IL
PROFESSIONAL ENGINEER

EXPIRES: 07/31/22 SIGNED: 01/10/22

REVISIONS

REV.	ISSUED FOR	DATE	BY
A	FOR CLIENT REVIEW	08/14/20	PS
0	FINAL	09/04/20	KLO
1	REVISION	09/08/20	KLO
2	REVISION	09/10/20	JTB
B	REVISION	06/29/21	SC
3	SA REVISION	07/21/21	KLO
4	REVISION	01/10/22	JTB

AQUATIC \ DESIGN & PROGRAM MANAGEMENT
CIVIL \ TELECOMMUNICATION \ MECHANICAL
PLUMBING \ ELECTRICAL \ LAND SURVEYING
ACCESSIBILITY CONSULTING \ STRUCTURAL

CHECK: JKR
DRAWN: PS
JOB: 2001125T

A-5
EQUIPMENT SPECIFICATIONS

DELTA
Smarter. Greener. Together.

Specifications

Model **HPL3 (HP-Large 3 Power Cabinet)**

1. General	
Construction	Aluminum enclosure
Dimensions (W x H x D)	30 x 72 x 34.6 in. (762 x 1829x 879mm), Depth with Door/Hatch: 44.7 in. (1136mm)
Weight	~595 lbs (~270kg) (without customer equipment or batteries)
Internal rack dimension	Total Equipment space 30RU: Horizontal rack: 19" x 27RU Vertical rack: 19" x 3RU Power System space: 23" x 12RU
Mounting options	Pad-mount, plinth option
Finish	Polyester Power Paint (Tan)
Safety	UL Listed , IEC / EN 60950
2. Environment	
Operating temperature	-40°C to +50°C (-40°F to +122°F) with solar load. IP 55
Protection class	designed to GR-487
Acoustics	65dBA @5000W heat load , 70dBA @ 6000W
Humidity (relative)	95%, non-condensing (Max.)
3. Thermal Management	
Cooling Equipment:	Direct Air Cooling, 6000W capacity, 5°C delta T
Heating Equipment:	Forced air heating (2) 1000W AC heaters
4. Equipment	
Cable entry	Knock-out plate on each upper side wall / Additional knockouts on sides (1) 3" conduit hole with hole plug
Door latch	3 point latching, 5/16 nut driver tool, pad-locking capability
Primary ground	10 double-hole ¼"-20 threaded holes on 5/8" center ground bar
Lifting Ears	4 Lifting Tabs
Plinth	Optional 6" plinth available
Standard equipment	AC Load Center: 240V split phase, dual feed / (1) 200A + (1)100A 208V 3-phase, single feed / (1) 200A AC Surge Protection for each breaker feed GFCI Receptacle 120V Temp Probes (6 form-C) Alarm Termination block 605A/ 54V (336kW) redundant Power System with DIN rail distribution: 12 rectifier positions (3x55A DPR3000 rectifiers included) 48 poles for load (2x10A, 3x50A, and 6x100A load breakers included) 16 poles for battery (2) SB350 / (2) SB175 Battery connections (3) SB350 Generator connections
Front Door:	(6) DC powered centrifugal fans with (3) MERV-13 filters, (GORE option) Clogged Filter alarm pressure switch Door intrusion alarm (2) 1000W AC powered heaters LED interior cabinet light
Rear Hatch:	Exhaust vent with (3) MERV-13 filters, (GORE option)
5. Ordering information	
Cabinet	ESOA600-HCU01 — HP-Large 3 600A Power / Equipment Cabinet
Rectifier	ESR-48/60A A-T — 48V / 56A 3000W, 96.4%, CAN communication
Controller (Spare)	TPS1020028AU17 — Orion TOUCH Controller
Plinth, 6"	37993318816900-S — Plinth for V1/V2, HPL2, HPL3, LB2 and LB3

*All specifications are subject to change without prior notice

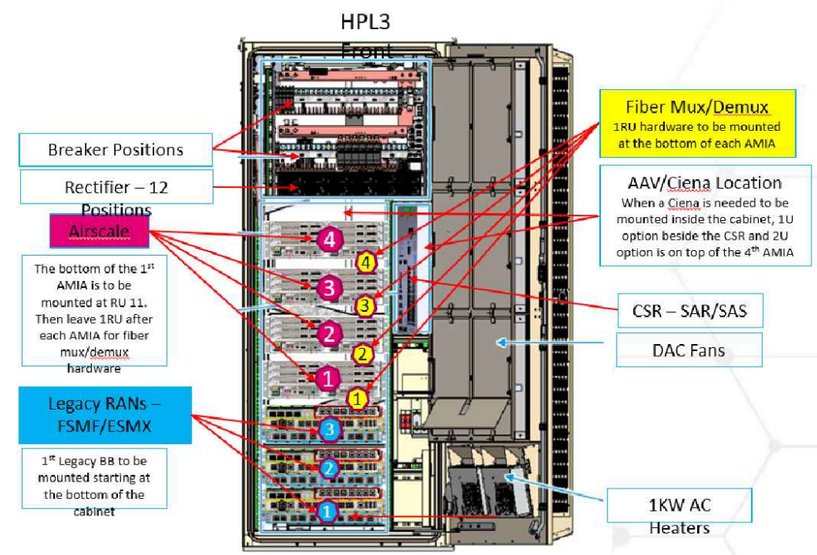

SITE SUPPORT CABINET | 1

SCALE: NONE

T-Mobile

NTPWIRELESS® EVERY SITE. EVERY DAY

ML70554A
HOST WT LAKE GENEVA
1003 HOST DRIVE,
LAKE GENEVA, WI 53147

WT GROUP
Engineering with Precision, Pace and Passion.
2075 Pratum Avenue | Hoffman Estates, IL 60192
T 224.293.3151 F 224.293.0444
wtengineering.com

WT Group
Engineering • Design • Consulting

© COPYRIGHT 2022 THE W-T GROUP, LLC

WISCONSIN JEFF S. GUTOWSKY 36509-006 HOFFMAN ESTATES, IL PROFESSIONAL ENGINEER

EXPIRES: 07/31/22 SIGNED: 01/10/22

REVISIONS

REV.	ISSUED FOR	DATE	BY
A	FOR CLIENT REVIEW	08/14/20	PS
0	FINAL	09/04/20	KLO
1	REVISION	09/08/20	KLO
2	REVISION	09/10/20	JTB
B	REVISION	06/29/21	SC
3	SA REVISION	07/21/21	KLO
4	REVISION	01/10/22	JTB

AQUATIC \ DESIGN & PROGRAM MANAGEMENT
CIVIL \ TELECOMMUNICATION \ MECHANICAL
PLUMBING \ ELECTRICAL \ LAND SURVEYING
ACCESSIBILITY CONSULTING \ STRUCTURAL

CHECK: JKR
DRAWN: PS
JOB: 2001125T

A-6
EQUIPMENT SPECIFICATIONS

DELTA
Smarter. Greener. Together.

Specifications

Model	Large 3 Battery (LB3) Cabinet	
1. General		
Construction	Aluminum enclosure	
Dimensions (W x H x D)	30 x 72 x 35 in. (766 x 1829x 889mm), Depth with door: 41 in. (1045mm)	
Weight	~540lbs (245kg) (without batteries)	
Internal rack dimension	4 battery trays to support up to 210Ah batteries	
Mounting options	Pad-mount, plinth option	
Finish	Polyester Powder Paint (Tan)	
Safety	UL Listed, IEC / EN 60950	
2. Environment		
Operating temperature	-40C to +50C (-40F to +122F) with solar load.	
Protection class	IP55 designed to GR-487	
Acoustics	65 dBA	
Humidity (relative)	95%, non-condensing (Max.)	
3. Thermal management		
Cooling	Direct Air Cooling: (4) Axial Fans. Filters: F6 front and rear	
Heating	Forced air heating (2) 1000W AC heaters	
4. Equipment		
Cable Entry	Knock-out plate on each upper side wall Additional knockouts each side	
Door latch	3 point latching, 5/16 Nut driver tool, pad-locking capability	
Lifting Ears	4 eye bolts	
Standard equipment	AC Load Center with AC Surge protection and GFCI outlet Left or Right side AC entry options (2) 1000W AC powered heater DC Load Center 600A bulk feed bus bar (4) 20050A DIN rail battery breakers (4) 2-hole lug landings (2) Anderson SB350 input connectors to daisy chain 2nd battery cabinet 2AWG battery cables from breakers to trays Configurable trays for (4) strings of up to 210Ah batteries Door intrusion switch LED interior cabinet light Fan Control Board, factory wired alarms via RJ45 output (fan & breaker alarms) Cabinet Connection kit (2) 4/0 cables with SB350 disconnects to connect to power cabinet	
5. Ordering information		
Cabinet	ESOF015-ECV04	Large Battery 3 Cabinet
Plinth, 6"	37993318816900-S	Plinth for V1/V2, HPL2, LB2 cabinets only

*All specifications are subject to change without prior notice.

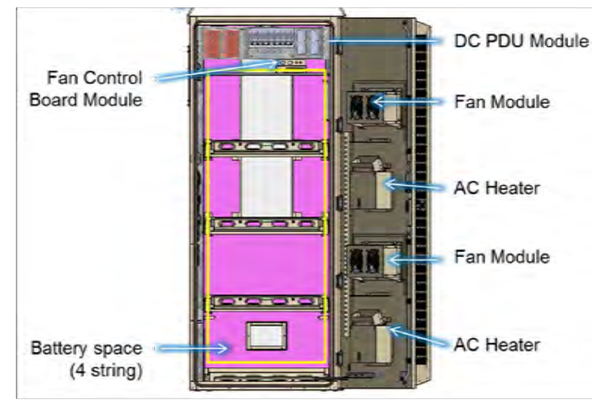

BATTERY CABINET | 1

SCALE: NONE

T-Mobile

NTPWIRELESS® EVERY SITE. EVERY DAY

ML70554A
HOST WT LAKE GENEVA
1003 HOST DRIVE,
LAKE GENEVA, WI 53147

WT GROUP
Engineering with Precision, Pace and Passion.
2075 Pratum Avenue | Hoffman Estates, IL 60192
T 224.293.3315 F 224.293.0444
wtengineering.com

WT Group
Engineering • Design • Consulting

© COPYRIGHT 2022 THE W-T GROUP, LLC

WISCONSIN
JEFF S. GUTOWSKY
35509-006
HOFFMAN ESTATES, IL
PROFESSIONAL ENGINEER

EXPIRES: 07/31/22 SIGNED: 01/10/22

REVISIONS

REV.	ISSUED FOR	DATE	BY
A	FOR CLIENT REVIEW	08/14/20	PS
0	FINAL	09/04/20	KLO
1	REVISION	09/08/20	KLO
2	REVISION	09/10/20	JTB
B	REVISION	06/29/21	SC
3	SA REVISION	07/21/21	KLO
4	REVISION	01/10/22	JTB

AQUATIC \ DESIGN & PROGRAM MANAGEMENT
CIVIL \ TELECOMMUNICATION \ MECHANICAL
PLUMBING \ ELECTRICAL \ LAND SURVEYING
ACCESSIBILITY CONSULTING \ STRUCTURAL

CHECK: JKR
DRAWN: PS
JOB: 2001125T

A-7
EQUIPMENT SPECIFICATIONS

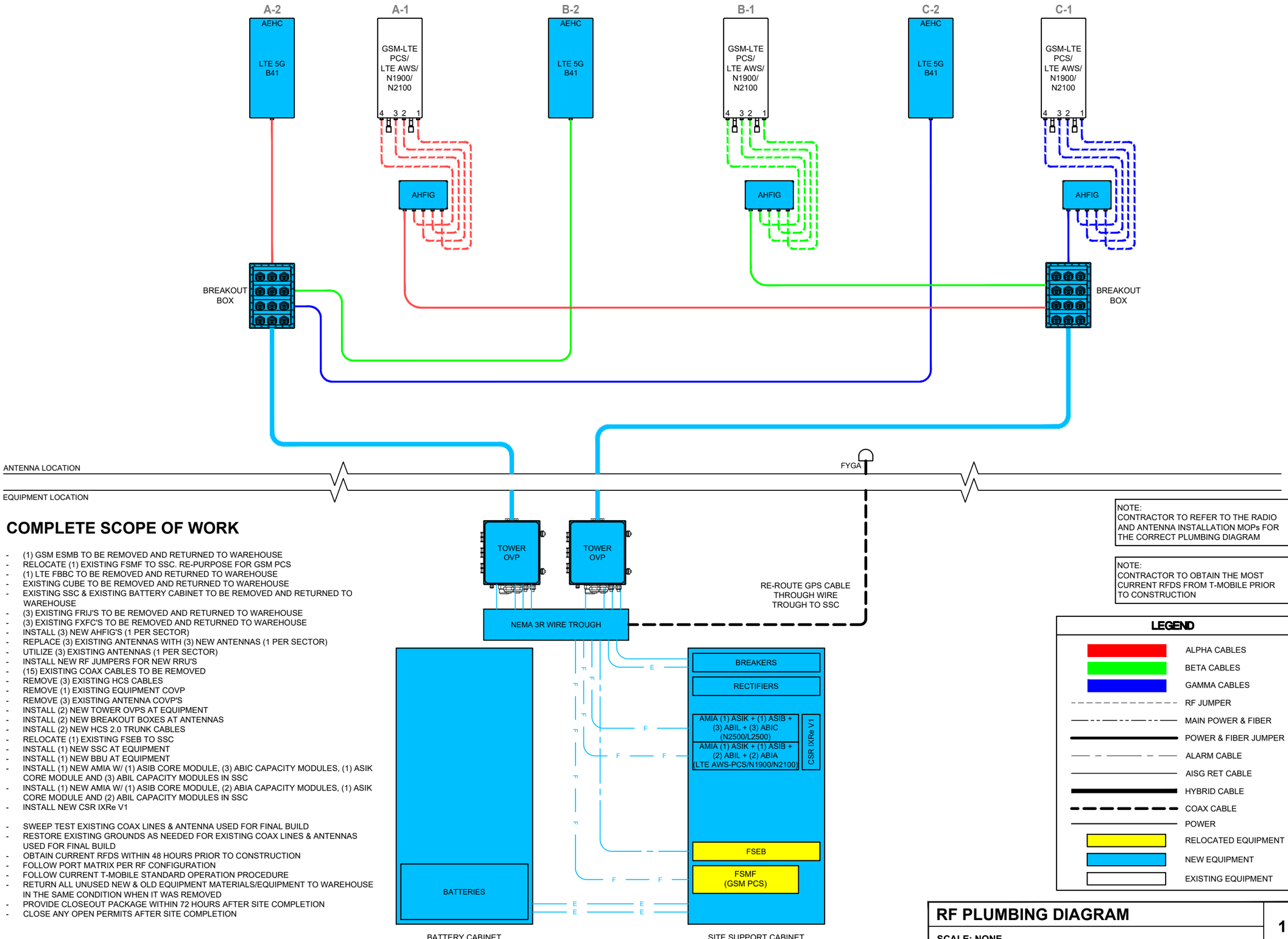

COMPLETE SCOPE OF WORK

- (1) GSM ESMB TO BE REMOVED AND RETURNED TO WAREHOUSE
- RELOCATE (1) EXISTING FSMF TO SSC. RE-PURPOSE FOR GSM PCS
- (1) LTE FBBC TO BE REMOVED AND RETURNED TO WAREHOUSE
- EXISTING CUBE TO BE REMOVED AND RETURNED TO WAREHOUSE
- EXISTING SSC & EXISTING BATTERY CABINET TO BE REMOVED AND RETURNED TO WAREHOUSE
- (3) EXISTING FRIJ'S TO BE REMOVED AND RETURNED TO WAREHOUSE
- (3) EXISTING FXFC'S TO BE REMOVED AND RETURNED TO WAREHOUSE
- INSTALL (3) NEW AHFIG'S (1 PER SECTOR)
- REPLACE (3) EXISTING ANTENNAS WITH (3) NEW ANTENNAS (1 PER SECTOR)
- UTILIZE (3) EXISTING ANTENNAS (1 PER SECTOR)
- INSTALL NEW RF JUMPERS FOR NEW RRU'S
- (15) EXISTING COAX CABLES TO BE REMOVED
- REMOVE (3) EXISTING HCS CABLES
- REMOVE (1) EXISTING EQUIPMENT COVP
- REMOVE (3) EXISTING ANTENNA COVP'S
- INSTALL (2) NEW TOWER OVPS AT EQUIPMENT
- INSTALL (2) NEW BREAKOUT BOXES AT ANTENNAS
- INSTALL (2) NEW HCS 2.0 TRUNK CABLES
- RELOCATE (1) EXISTING FSEB TO SSC
- INSTALL (1) NEW SSC AT EQUIPMENT
- INSTALL (1) NEW BBU AT EQUIPMENT
- INSTALL (1) NEW AMIA W/ (1) ASIB CORE MODULE, (3) ABIC CAPACITY MODULES, (1) ASIK CORE MODULE AND (3) ABIL CAPACITY MODULES IN SSC
- INSTALL (1) NEW AMIA W/ (1) ASIB CORE MODULE, (2) ABIA CAPACITY MODULES, (1) ASIK CORE MODULE AND (2) ABIL CAPACITY MODULES IN SSC
- INSTALL NEW CSR IXRe V1

- SWEEP TEST EXISTING COAX LINES & ANTENNA USED FOR FINAL BUILD
- RESTORE EXISTING GROUNDS AS NEEDED FOR EXISTING COAX LINES & ANTENNAS USED FOR FINAL BUILD
- OBTAIN CURRENT RFDS WITHIN 48 HOURS PRIOR TO CONSTRUCTION
- FOLLOW PORT MATRIX PER RF CONFIGURATION
- FOLLOW CURRENT T-MOBILE STANDARD OPERATION PROCEDURE
- RETURN ALL UNUSED NEW & OLD EQUIPMENT MATERIALS/EQUIPMENT TO WAREHOUSE IN THE SAME CONDITION WHEN IT WAS REMOVED
- PROVIDE CLOSEOUT PACKAGE WITHIN 72 HOURS AFTER SITE COMPLETION
- CLOSE ANY OPEN PERMITS AFTER SITE COMPLETION

NOTE:
CONTRACTOR TO REFER TO THE RADIO AND ANTENNA INSTALLATION MOPs FOR THE CORRECT PLUMBING DIAGRAM

NOTE:
CONTRACTOR TO OBTAIN THE MOST CURRENT RFDS FROM T-MOBILE PRIOR TO CONSTRUCTION

LEGEND

- ALPHA CABLES
- BETA CABLES
- GAMMA CABLES
- RF JUMPER
- MAIN POWER & FIBER
- POWER & FIBER JUMPER
- ALARM CABLE
- AISG RET CABLE
- HYBRID CABLE
- COAX CABLE
- POWER
- RELOCATED EQUIPMENT
- NEW EQUIPMENT
- EXISTING EQUIPMENT

RF PLUMBING DIAGRAM

SCALE: NONE

1

T-Mobile

WT GROUP
Engineering with Precision, Pace and Passion.
2075 Pratum Avenue | Hoffman Estates, IL 60192
T: 224.293.3311 F: 224.293.0444
wtengineering.com
© COPYRIGHT 2022 THE W-T GROUP, LLC

WT Group
Engineering • Design • Consulting

NTPWIRELESS
EVERY SITE. EVERY DAY

ML70554A
HOST WT LAKE GENEVA
1003 HOST DRIVE,
LAKE GENEVA, WI 53147

WISCONSIN JEFF S. GUTOWSKY S-2509-006 HOFFMAN ESTATES, IL PROFESSIONAL ENGINEER

EXPIRES: 07/31/22 SIGNED: 01/10/22

REVISIONS

REV.	ISSUED FOR	DATE	BY
A	FOR CLIENT REVIEW	08/14/20	PS
0	FINAL	09/04/20	KLO
1	REVISION	09/08/20	KLO
2	REVISION	09/10/20	JTB
B	REVISION	06/29/21	SC
3	SA REVISION	07/21/21	KLO
4	REVISION	01/10/22	JTB

AQUATIC \ DESIGN & PROGRAM MANAGEMENT
CIVIL \ TELECOMMUNICATION \ MECHANICAL
PLUMBING \ ELECTRICAL \ LAND SURVEYING
ACCESSIBILITY CONSULTING \ STRUCTURAL

CHECK: JKR
DRAWN: PS
JOB: 2001125T

A-8
RF PLUMBING DIAGRAM

PPC NOTES:
- LOW VOLTAGE CONDUIT FROM PPC TO SSC
- (2) RUNS OF BELDEN 27916A 18 AWG 2 CONDUCTOR TYPE TC CABLE, 600V WIRE
- WIRE TO NORMALLY CLOSED RELAY FOR LOCP
- WIRE TO NORMALLY OPEN RELAY FOR GENERATOR RUN

LEGEND

F	FIBER LINE
E	ELECTRIC LINE
A	ALARM LINE

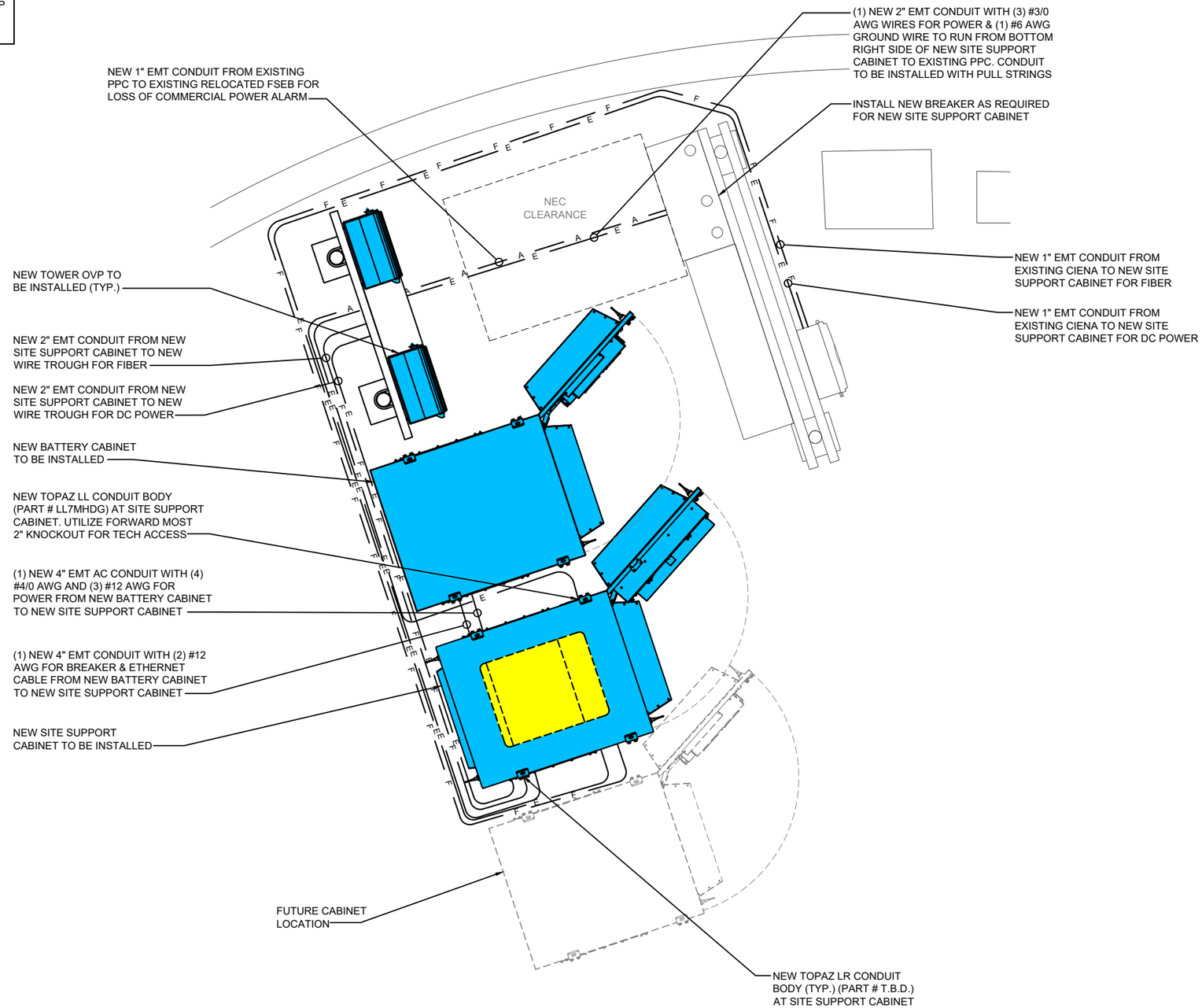

N

UTILITY PLAN

SCALE: 1/2" = 1'-0"

1

T-Mobile

WT GROUP
Engineering with Precision, Pace and Passion.
2675 Pratum Avenue | Hoffman Estates, IL 60192
T 224.293.3111 F 224.293.3444
wtengineering.com

©COPYRIGHT 2022 THE W-T GROUP, LLC

WT Group
Engineering • Design • Consulting

NTPWIRELESS
EVERY SITE. EVERY DAY

ML70554A
HOST WT LAKE GENEVA
1003 HOST DRIVE,
LAKE GENEVA, WI 53147

WISCONSIN
JEFF S. GUTOWSKY
36509-006
HOFFMAN ESTATES, IL
PROFESSIONAL ENGINEER

EXPIRES: 07/31/22 SIGNED: 01/10/22

REVISIONS

REV.	ISSUED FOR	DATE	BY
A	FOR CLIENT REVIEW	08/14/20	PS
0	FINAL	09/04/20	KLO
1	REVISION	09/08/20	KLO
2	REVISION	09/10/20	JTB
B	REVISION	06/29/21	SC
3	SA REVISION	07/21/21	KLO
4	REVISION	01/10/22	JTB

AQUATIC \ DESIGN & PROGRAM MANAGEMENT
CIVIL \ TELECOMMUNICATION \ MECHANICAL
PLUMBING \ ELECTRICAL \ LAND SURVEYING
ACCESSIBILITY CONSULTING \ STRUCTURAL

CHECK: JKR
DRAWN: PS
JOB: 2001125T

E-1
UTILITY PLAN

GROUNDING STANDARDS:

1.0 DEFINITIONS

AGB: ANTENNA GROUND BAR

AWG: AMERICAN WIRE GAUGE

CADWELDING: AN EXOTHERMIC WELDING PROCESS WHICH CREATES POSITIVE CONTACT OF POSITIVE CONTACT OF GROUNDING CONDUCTORS

EMT: ELECTRICAL METAL TUBING (LIGHT GAUGE METALLIC CONDUIT)

MGB: MASTER GROUND BAR

PVC: POLYVINYL CHLORIDE CONDUIT

RFI: RADIO FREQUENCY INTERFERENCE

TGB: TOWER GROUND BAR

THWN: LETTER TYPE DESIGNATION FOR CONDUCTOR INSULATION THAT IS A MOISTURE AND HEAT RESISTANT THERMOPLASTIC WITH A MAXIMUM OPERATING TEMPERATURE OF 75 DEGREES CELSIUS OR 167 DEGREES FAHRENHEIT

T/I: TENANT IMPROVEMENT

2.0 BACKGROUND

2.1 AREAS OF CONCERN: WHEN DESIGNING A GROUNDING SYSTEM FOR A MOBILE RADIO FACILITY THERE ARE FOUR INTERRELATED AREAS OF CONCERN. THE BASIC OBJECTIVE FOR EACH IS:

1. LIGHTNING PROTECTION -TO MAINTAIN ALL EQUIPMENT AT THE SAME POTENTIAL DURING A LIGHTNING IMPULSE.
2. RFI FOR NOISE INDUCTION CONTROL -TO ESTABLISH THE LOWEST POSSIBLE IMPEDANCE AMONG ALL EQUIPMENT.
3. ELECTROSTATIC CONTROL -TO REDUCE ELECTROSTATIC DISCHARGE PROBLEMS.
4. PERSONNEL SAFETY -TO MAINTAIN A MINIMUM VOLTAGE DIFFERENCE BETWEEN ANY TWO METALLIC OBJECTS WHICH PERSONNEL MIGHT CONTACT SIMULTANEOUSLY.

2.2 A/C GROUNDING: IN THIS GROUNDING SYSTEM THE A/C SERVICE GROUND SHALL BE KEPT ISOLATED FROM THE EQUIPMENT FRAME WORK AND LIGHTNING PROTECTION GROUND SYSTEMS EXCEPT FOR ONE SPECIFIC POINT. THIS POINT IS THE MAIN GROUNDING POINT OF THE SYSTEM. THIS WOULD TYPICALLY BE CONNECTING THE A/C SERVICE GROUND AT THE COMMERCIAL POWER RISER POLE DISCONNECT/METER BASE TO THE EXTERNAL GROUND RING. ALL GROUNDING CONNECTIONS INSIDE OF CABINETS SHALL BE SCRAPED TO BARE METAL AND COATED WITH NOALOX.

2.3 LIGHTNING CONSIDERATIONS: LIGHTNING DAMAGE OCCURS FROM EITHER INDUCTION OR FROM AN ACTUAL DIRECT STRIKE TO THE BUILDING, USUALLY TAKEN THROUGH THE TOWER AND/OR ANTENNAS. STRIKES TO OTHER NEARBY OBJECTS INDUCE HIGH ENERGY INTO POWER OR TELEPHONE CABLES ENTERING THE BUILDING. THIS TYPE OF EFFECT HISTORICALLY CAUSES MOST OF THE DAMAGE TO THE BUILDING AND ITS CONTENTS.

3.0 STATION GROUNDING SYSTEM

3.1 MATERIALS:

1. #2 AWG, BARE SOLID TINNED COPPER WIRE, FOR ALL EXTERIOR CONDUCTORS AND TOWER GROUND BAR CONDUCTORS OR AS OTHERWISE SPECIFIED. GROUNDS TO THE RF MODULES SHALL BE NO. 6 STANDARD GREEN INSULATED JUMPERS. THE GROUND WIRE TO THE MGB SHALL BE GREEN JACKETED STRANDED #2 TINNED WIRE BURNDY CONNECTED TO THE BUSS BAR AND CONNECTED TO THE GROUND RING ON A GROUND ROD.
2. #2 AWG, INSULATED STRANDED COPPER CABLE IS ACCEPTABLE FOR INTERIOR GROUND BAR CONDUCTORS ON TENANT IMPROVEMENT SITES.
3. 5/8" X 10" GROUND RODS OF SOLID COPPER, STAINLESS STEEL OR COPPER CLAD HIGH STRENGTH STEEL.
4. ABOVE GRADE CONNECTIONS SHALL BE BURNDY HYGROUND COMPRESSION. BELOW GRADE CONNECTIONS SHALL BE EXOTHERMIC WELD OR OTHER APPROVED EXOTHERMIC WELDING SYSTEM FOR BONDING AS SPECIFIED.
5. XIT OR ADVANCED GROUNDING ELECTRODE (AGE), ALL CHEMICAL GROUND RODS SHALL BE UL APPROVED.
6. SOLID COPPER PLATES OF MINIMUM 3'X3'X1/4" SIZE AS SPECIFIED.
7. NOALOX OR APPROVED EQUAL CONDUCTIVE MEDIUM MATERIAL SHALL BE USED IN ALL MECHANICAL CONNECTIONS.
8. #2 AWG STRANDED INSULATED (GREEN) FOR ALL INTERNAL EQUIPMENT GROUNDING.
9. MECHANICAL FASTENERS (I.E., DOUBLE LUGS, SPLIT BOLTS PARALLEL CONNECTORS) SHALL BE BRONZE, BRASS, COPPER OR STAINLESS STEEL AND HAVE NOALOX BETWEEN CONDUCTOR AND CONNECTION.
10. BOLTS, NUTS AND SCREWS USED TO FASTEN MECHANICAL CONNECTORS SHALL BE STAINLESS STEEL WITH STAR TYPE STAINLESS STEEL LOCK WASHERS.
11. ALL LUG TUBE FASTENERS SHALL PROVIDE TWO HOLES TO ALLOW A DOUBLE BOLT CONNECTION.

3.2 MASTER GROUND BAR (MGB): THE PURPOSE OF THE MASTER GROUND BAR IS TO GROUND THE BTS AND ANY OTHER METALLIC OBJECTS AROUND THE BTS. IF AN MGB IS NOT PROVIDED WITH THE BTS, THE MGB SHALL BE AS FOLLOWS: THE MGB IS A COPPER BAR MEASURING 4"W X 24"L X 1/4" LOCATED AS CLOSE TO THE BTS AS POSSIBLE. THE MGB SHALL HAVE A MINIMUM NUMBER OF (28) 3/8" HOLES. GROUND BAR SHALL BE SUPPORTED BY MOUNTING BRACKETS WITH INSULATOR STANDOFFS. (2) #2 TINNED SHALL BE MECHANICALLY ATTACHED (2-HOLE COMPRESSION LUG 3/8" HOLES, 1" CENTER TO CENTER SPACING) TO THE MGB AND DOWN LEADS THEN TAKEN THROUGH CONDUIT TO THE GROUND RING. THIS CONDUCTOR SHALL BE KEPT SEPARATE AND ISOLATED UNTIL TERMINATING AT THE MAIN GROUNDING POINT, (I.E. EXTERIOR GROUND RING OR BUILDING STEEL).

3.3 ANTENNA GROUND BAR (AGB): THE PURPOSE OF THE ANTENNA GROUND BAR IS PRIMARILY FOR LIGHTNING PROTECTION. COAXIAL CABLE IS USUALLY THE ONLY ITEM GROUNDED TO THIS BAR. HOWEVER IT IS ACCEPTABLE TO BOND EXTERIOR; CABLE TRAY, WAVE GUIDE PORTS AND CANTILEVERED WAVE GUIDE BRIDGES TO THE AGB. THE AGB IS A COPPER BAR MEASURING 4"W X 24"L X 1/4". THERE SHALL BE TWO AGBS, ONE LOCATED AT THE TOP OF THE TOWER AT THE START OF THE VERTICAL RUN OF COAX, THE OTHER AT THE BOTTOM OF THE VERTICAL RUN OF COAX BEFORE IT MAKES ITS BEND. (IF THE TOWER IS OVER 200' THERE SHALL BE A THIRD AGB LOCATED AT HE MIDDLE OF THE TOWER).THE AGB SHALL HAVE A MINIMUM OF (28) 3/8" HOLES. GROUND BARS SHALL BE SUPPORTED BY MOUNTING BRACKETS WITH INSULATOR STANDOFFS. USE #2 AWG SOLID TINNED WIRE W/ 2-HOLE SHORT BARREL COMPRESSION LUGS 3/8" HOLES, 1" CENTER TO CENTER SPACING). THIS CONDUCTOR SHALL BE KEPT SEPARATE AND ISOLATED UNTIL TERMINATING AT THE MAIN GROUNDING POINT (I.E. EXTERIOR GROUND RING, OR BUILDING STEEL.)

3.4 SURGE ARRESTOR GROUND BAR: THE PURPOSE OF THE SURGE ARRESTOR GROUND BAR IS FOR LIGHTING PROTECTION. THE SURGE ARRESTOR GROUND BAR IS A BENT (3" X 3") X 1/4" X 24" COPPER BAR. IT IS LOCATED ON THE WAVEGUIDE BRIDGE SUPPORT CLOSEST TO THE EQUIPMENT. ONE FACE OF THE BAR SHALL HAVE A MINIMUM OF (28) 3/8" DIA. HOLES. HOLES SHALL BE IN PAIRS THAT ARE 1" CENTER TO CENTER. THE OTHER FACE SHALL HAVE 3/8" DIA. HOLES AS REQUIRED TO ATTACH AND GROUND COAXIAL SURGE ARRESTORS. THE GROUND BAR SHALL BE SUPPORTED BY MOUNTING BRACKETS WITH INSULATOR STANDOFFS.

3.5 ANTENNA GROUNDING: EACH ANTENNA COAXIAL CABLE SHALL TYPICALLY BE GROUNDED AT THREE POINTS USING A HARD-SHELL COAXIAL CABLE KIT FROM THE MANUFACTURER OF THE ANTENNA CABLE. A TYPICAL INSTALLATION SHALL BE AS FOLLOWS:

A. THE FIRST GROUND CONNECTION SHALL OCCUR AS CLOSE TO THE ANTENNA AS POSSIBLE, BELOW THE FIRST POINT THE COAX CABLE BEGINS TO RUN VERTICAL DOWN THE TOWER. THIS GROUND SHALL TERMINATE DIRECT TO THE TOP AGB. ON A T/I, GROUND TO THE AGB AT THE ANTENNA MOUNTS.

B. THE SECOND GROUND SHALL BE MADE AT THE BOTTOM OF THE VERTICAL RUN OF THE COAXIAL CABLE AS IT TURNS OUT AWAY FROM THE TOWER TOWARDS THE BTS. THIS GROUND SHALL BE TERMINATED AT THE TGB. THE TGB SHALL HAVE TWO (2) LEADS OF #2 AWG BARE TINNED SOLID COPPER WIRE, AND SHALL TERMINATE AT THE TOWER GROUND RING. THESE SHALL BE ENCASED IN PVC PIPE.

C. THE THIRD GROUND SHALL BE ON THE SURGE ARRESTOR. GROUND TO BE ATTACHED TO THE CABLE ON STRAIGHT RUNS (NOT WITHIN BENDS) AND BE WEATHERPROOFED PER THE MANUFACTURER'S SPECIFICATIONS. THE SURGE ARRESTORS SHALL BE GROUNDED TO THE GROUND BAR. THE SAGB SHALL HAVE TWO (2) LEADS OF #2 AWG BARE TINNED SOLID COPPER WIRE, AND SHALL TERMINATE AT THE TOWER GROUND RING. THESE SHALL BE ENCASED IN PVC PIPE.

3.6 EXOTHERMIC WELD & BURNDY CONNECTIONS
EXOTHERMIC WELDS AND BURNDY CONNECTIONS SHALL BOND ALL UNDERGROUND AND DAMP LOCATION CONNECTIONS, SHELTER SKID GROUNDS, TOWER OR MONOPOLE GROUNDS, FENCING CORNER AND GATE POSTS, ANTENNA GROUND BARS, (AGB) SURGE ARRESTER GROUND BAR, AND THE MASTER GROUND BAR (MGB). MECHANICAL CONNECTIONS SHALL BE TYPICALLY USED TO BOND ALL INTERIOR EQUIPMENT, COAX CABLE BRIDGES AND COAXIAL CABLE GROUND KITS. ALL LUG TYPE MECHANICAL CONNECTORS TO THE MGB OR AGB SHALL BE TWO HOLE TYPE CONNECTED WITH STAINLESS STEEL BOLTS AND NUTS WITH STAINLESS STEEL LOCK WASHERS AND NOALOX ON EITHER SIDE OF THE BUSS BAR.

3.7 LIMITS OF BEND RADIUS: IT IS IMPORTANT THAT THE GROUNDING CONDUCTOR CONNECTING THE INSIDE AND OUTSIDE GROUND SYSTEMS BE AS STRAIGHT AS POSSIBLE, WITH NO TURN OR BEND SHORTER THAN ONE FOOT RADIUS WITH A THREE FOOT RADIUS PREFERRED. NO RIGHT ANGLE OR SHARP BENDS SHALL BE ALLOWED.

3.8 BONDING PREPARATION & FINISH: ALL SURFACES REQUIRE PREPARATION PRIOR TO BONDING OF EITHER EXOTHERMIC WELD OR BURNDY FASTENERS. GALVANIZED SURFACES SHALL BE GROUND OR SANDED TO THE POINT OF EXPOSING THE STEEL SURFACE BELOW, PRIOR TO BONDING THE GROUND CONDUCTOR. FOR OTHER SURFACES INCLUDING COPPER BUSS BARS ALL PAINT, RUST TARNISH AND GREASE SHALL BE REMOVED PRIOR TO BONDING THE GROUND CONDUCTOR. EXOTHERMIC WELD TYPE BONDS SHALL BE FINISHED WITH THE APPLICATION OF COLD GALVANIZATION AND WHEN APPLICABLE, FINISH PAINTED WITH AN APPROPRIATE COLOR AS REQUIRED. MECHANICAL TYPE BONDS ON BUSS BARS SHALL BE FINISHED WITH THE APPLICATION OF NOALOX OR OTHER APPROVED CONDUCTIVE MEDIUM MATERIAL BETWEEN CONNECTOR AND BUSS BAR. MECHANICAL TYPE BONDS ON ALL OTHER SURFACES SHALL BE FINISHED WITH THE APPLICATION OF COLD GALVANIZATION AND/OR THE APPROPRIATE PAINT TO MATCH AS REQUIRED.

3.9 TESTING: THE OUTSIDE GROUND RING SHALL BE TESTED AFTER INSTALLATION BUT PRIOR TO BACKFILLING THE GROUND RING TRENCH. THE GROUND FIELD RESISTANCE SHALL MEASURE 5 OHMS OR LESS TO GROUND. ANY DIFFICULTY IN ACHIEVING THIS LEVEL OF RESISTANCE MUST BE BROUGHT TO THE ATTENTION OF THE PROJECT MANAGER. THE RESISTANCE TO GROUND SHALL BE MEASURED USING THE FALL OF POTENTIAL METHOD. TESTING SHALL BE PERFORMED BY AN OWNER PROVIDED INDEPENDENT TESTING LABORATORY FROM WHICH A WRITTEN REPORT SHALL BE PRODUCED FOR REVIEW BY THE PROJECT MANAGER.

3.10 GENERAL NOTES:

1. ALL ELECTRICAL WORK SHALL CONFORM TO THE NATIONAL ELECTRICAL CODE.
2. ALL GROUNDING SHALL COMPLY WITH THE NATIONAL ELECTRICAL CODE.
3. ALL ELECTRICAL ITEMS SHALL BE U.L. APPROVED OR LISTED.
4. CONTRACTOR TO OBTAIN ALL PERMITS, PAY PERMIT FEES, AND BE RESPONSIBLE FOR SCHEDULING INSPECTIONS.
5. PROVIDE ALL LABOR AND MATERIAL DESCRIBED ON THIS DRAWING, AND ALL ITEMS INCIDENTAL TO COMPLETING AND PRESENTING THIS PROJECT AS FULLY OPERATIONAL.
6. GROUNDING CONNECTIONS SHALL BE EXOTHERMIC TYPE ("EXOTHERMIC WELD") TO ANTENNA MASTS, AND THE GROUND BARS. REMAINING GROUNDING CONNECTIONS SHALL BE COMPRESSION FITTINGS.
7. GROUND COAXIAL CABLE SHIELDS AT BOTH ENDS WITH COAX CABLE GROUNDING KITS & INSTALL WEATHER PROOFING KIT AT EACH CONNECTION.
8. ALL EQUIPMENT FURNISHED BY OTHERS SHALL BE PROVIDED WITH PROPER MOTOR STARTERS, DISCONNECTS, CONTROLS, ETC. BY THE ELECTRICAL CONTRACTOR UNLESS SPECIFICALLY NOTED OTHERWISE. THE ELECTRICAL CONTRACTOR SHALL INSTALL AND COMPLETELY WIRE ALL ASSOCIATED EQUIPMENT IN ACCORDANCE WITH MANUFACTURER'S WIRE DIAGRAMS AND AS REQUIRED FOR A COMPLETE OPERATING INSTALLATION. ELECTRICAL CONTRACTOR SHALL VERIFY AND COORDINATE ELECTRICAL CHARACTERISTICS AND REQUIREMENTS OF EQUIPMENT PRIOR TO ROUGH-IN OF CONDUIT AND WIRING TO AVOID CONFLICTS WHERE APPLICABLE.
9. GROUNDING CONDUCTORS SHALL BE COPPER OR SOLID TINNED COPPER. ALL CONNECTIONS MADE BELOW GRADE SHALL BE SOLID TINNED COPPER. ALL CONNECTIONS ABOVE GRADE STRANDED IS PERMITTED.
10. ALL EXOTHERMIC WELDS ABOVE FINISHED GRADE SHALL BE PAINTED WITH CO-GALVANIZED ZINC ENRICHED PAINT TO MATCH COLOR OBJECT BONDED TO.
11. CONNECT COAX GROUND KITS TO MASTER GROUND BAR AT BASE OF TOWER.
12. CONNECT COAX GROUND KITS TO GROUND BUS AT TOP OF TOWER.
13. CONNECT RF MODULE GROUND TO GROUND BUS AT TOP OF TOWER.
14. PLAN DRAWINGS SHOWN HEREIN DO NOT NECESSARILY DEPICT ELECTRICAL REQUIREMENTS OF INDIVIDUAL EQUIPMENT AND DEVICES SUCH AS THE EQUIPMENT GROUNDING REQUIREMENTS, POWER REQUIREMENTS AND TELCO RACEWAY REQUIREMENTS.
15. PLAN DRAWINGS SHOWN HEREIN ARE DIAGRAMMATIC AND DO NOT NECESSARILY DEPICT THE EXACT EQUIPMENT QUANTITIES, LOCATION, LAYOUT AND CONFIGURATION. REFER TO ARCHITECTURAL PLANS FOR EXACT EQUIPMENT LOCATION, LAYOUT AND CONFIGURATION.
16. NUMBER OF ANTENNAS REPRESENTED IN THIS DETAIL ARE FOR SHOWING CLARITY OF GROUND SYSTEM REQUIREMENTS ONLY. SEE RF INFO FOR ANTENNA QUANTITY.
17. CONTRACTOR TO 'NOALOX' ALL CONNECTIONS TO GROUND BARS.

ANTENNA SECTOR

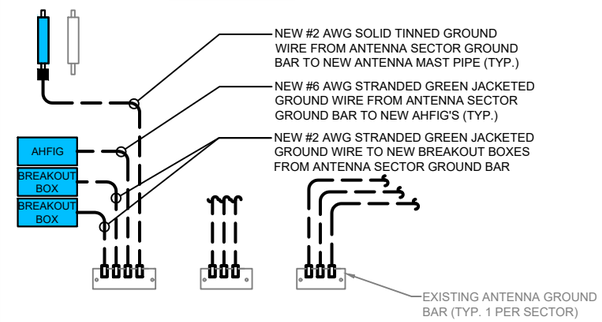

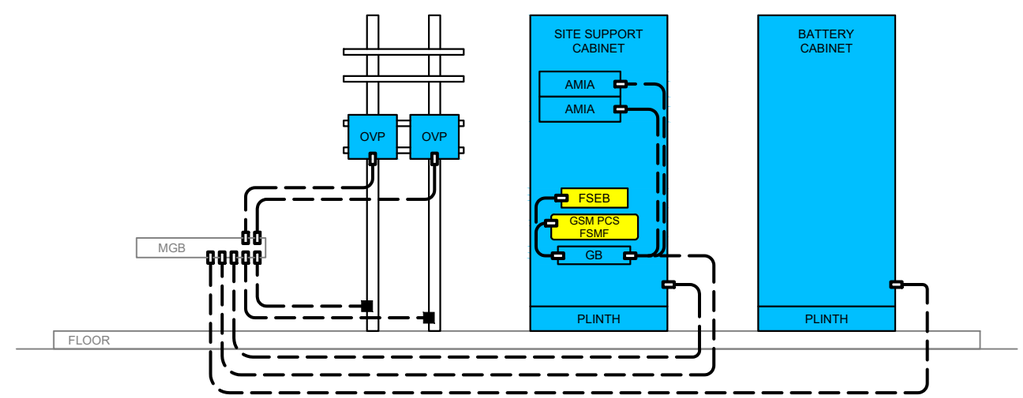

LEGEND

- NEW GROUNDING WIRE
- EXOTHERMIC WELD
- MECHANICAL CONNECTION/DOUBLE HOLE LUG TYPE CONNECTION
- EXISTING ANTENNA/EQUIPMENT
- RELOCATED ANTENNA/EQUIPMENT
- NEW ANTENNA/EQUIPMENT

NOTES:

- SYSTEM MODULE TO CABINET GROUND BAR: #6 AWG STRANDED GREEN JACKETED GROUND WIRE
- AMIA TO CABINET GROUND BAR: #6 AWG STRANDED GREEN JACKETED GROUND WIRE
- DELTA CABINETS TO MASTER GROUND BAR: #2 AWG STRANDED GREEN JACKETED GROUND WIRE
- FSEB TO CABINET GROUND BAR: #6 AWG STRANDED GREEN JACKETED GROUND WIRE
- OVP TO MASTER GROUND BAR: #2 AWG STRANDED GREEN JACKETED GROUND WIRE
- OVP FRAME TO MASTER GROUND BAR: #2 AWG STRANDED GREEN JACKETED GROUND WIRE

NOTE:
CONTRACTOR TO INSTALL/REPLACE NEW OR MISSING GROUND BARS AS REQUIRED.

GROUNDING RISER

SCALE: NONE

1

T-Mobile

NTPWIRELESS® EVERY SITE. EVERY DAY

WT GROUP
Engineering with Precision, Pace and Passion.
2675 Prairie Avenue | Hoffman Estates, IL 60192
T 224.293.3321 | F 224.293.3444
wtengineering.com

©COPYRIGHT 2022 THE W-T GROUP, LLC

WT Group
Engineering • Design • Consulting

ML70554A
HOST WT LAKE GENEVA
1003 HOST DRIVE,
LAKE GENEVA, WI 53147

WISCONSIN JEFF S. GUTOWSKY 36509-006 HOFFMAN ESTATES, IL PROFESSIONAL ENGINEER

EXPIRES: 07/31/22 SIGNED: 01/10/22

REVISIONS

REV.	ISSUED FOR	DATE	BY
A	FOR CLIENT REVIEW	08/14/20	PS
0	FINAL	09/04/20	KLO
1	REVISION	09/08/20	KLO
2	REVISION	09/10/20	JTB
B	REVISION	06/29/21	SC
3	SA REVISION	07/21/21	KLO
4	REVISION	01/10/22	JTB

AQUATIC \ DESIGN & PROGRAM MANAGEMENT
CIVIL \ TELECOMMUNICATION \ MECHANICAL
PLUMBING \ ELECTRICAL \ LAND SURVEYING
ACCESSIBILITY CONSULTING \ STRUCTURAL

CHECK: JKR
DRAWN: PS
JOB: 2001125T

GR-1
GROUNDING DETAILS

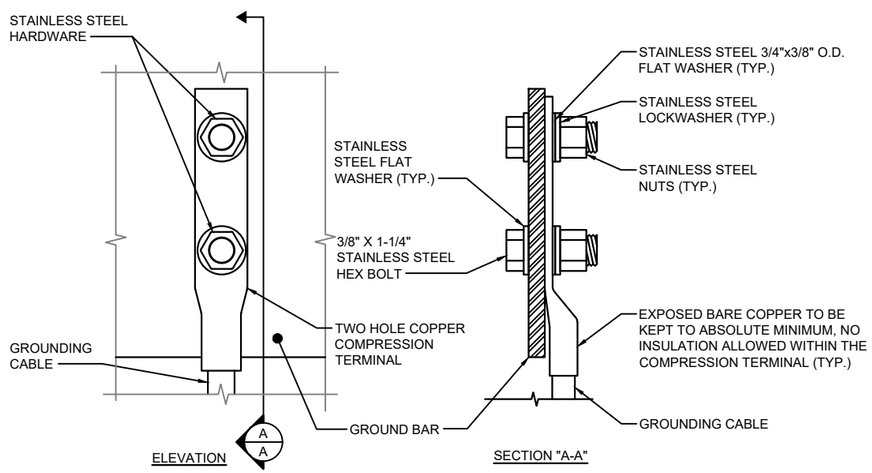

1. OXIDE INHIBITING COMPOUND TO BE USED AT ALL LOCATIONS
2. NO CRIMPING OF SOLID #2. USE EXOTHERMIC WELD ONLY

GROUND BAR CONNECTION DETAIL

SCALE: NONE

1

NOTE:
THE FOLLOWING SYMBOLS SHOWN ARE HARGER ULTRAWELD EXOTHERMIC CONNECTIONS WITH PART NUMBERS BELOW. THESE CONNECTIONS MAY BE CROSS-REFERENCED WITH CADWELD CONNECTIONS WHICH ARE SHOWN IN PARENTHESIS

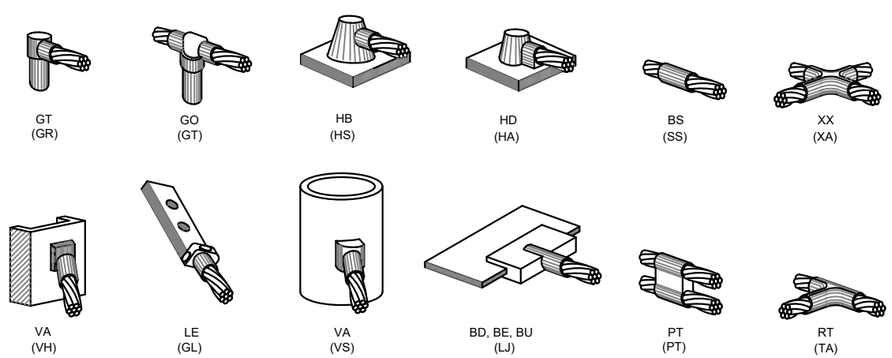

EXOTHERMIC WELD TYPES

SCALE: NONE

2

KEY NOTES:

1.	1/4" THK ELECTRICAL TINNED GROUND BAR HARGER OR APPROVED EQUAL. HOLE CENTERS TO MATCH NEMA DOUBLE LUG CONFIGURATION
2.	INSULATORS (UNLESS NOTED OTHERWISE)
3.	3/8" STAINLESS STEEL LOCKWASHERS
4.	WALL MOUNTING BRACKET
5.	3/8" STAINLESS STEEL BNLF BOLTS
6.	EXOTHERMICALLY WELD #2 AWG BARE TINNED SOLID COPPER CONDUCTOR TO GROUND BAR. ROUTE CONDUCTOR TO BURIED GROUND RING AND PROVIDE PARALLEL EXOTHERMIC WELD
7.	CONTRACTOR SHALL USE PERMANENT MARKER TO DRAW THE LINES BETWEEN EACH SECTION AND LABEL EACH SECTION ("P", "A", "N", "I") WITH 1" HIGH LETTERS

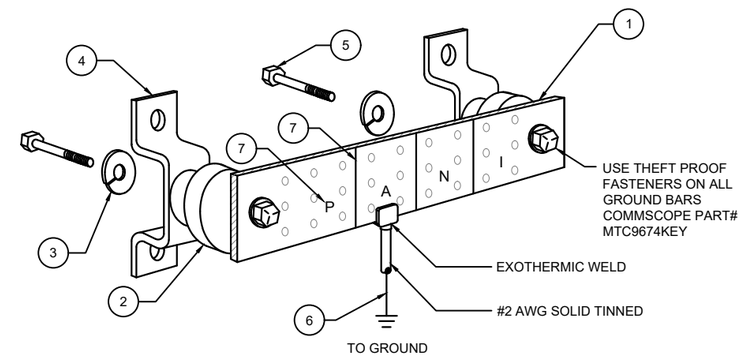

EACH GROUND CONDUCTOR TERMINATING ON ANY GROUND BAR SHALL HAVE AN IDENTIFICATION TAG ATTACHED AT EACH END THAT WILL IDENTIFY ITS ORIGIN AND DESTINATION

SECTION "P" - SURGE PRODUCERS

- COLLECTOR GROUND BAR
- GENERATOR FRAMEWORK (IF AVAILABLE)
- TELCO GROUND BAR
- COMMERCIAL POWER COMMON NEUTRAL/GROUND BOND
- FIBER GROUND BAR
- EQUIPMENT ROOM COLLECTOR GROUND BAR
- HVAC
- RECTIFIER FRAMES

SECTION "A" - SURGE ABSORBERS

- INTERIOR GROUND RING
- EXTERNAL EARTH GROUND FIELD (BURIED GROUND RING)
- METALLIC COLD WATER PIPE (IF AVAILABLE)
- BUILDING STEEL (IF AVAILABLE)
- AC POWER

SECTION "N" - NON-ISOLATED GROUND ZONE EQUIPMENT

- MISCELLANEOUS NON-ISOLATED GROUND ZONE EQUIPMENT
- CABLE TRAY SYSTEM
- EQUIPMENT FRAMES
- BATTERY RACKS
- DC POWER

SECTION "I" - ISOLATED GROUND ZONE

- ISOLATED EQUIPMENT FRAMES
- ISOLATED GROUND BAR - IGB

NOTES:
-EXTERIOR GROUND BARS TO BE TIN PLATED
-HARDWARE SHALL BE STAINLESS STEEL
-CONTRACTOR SHALL GROUP INCOMING WIRES
-CONTRACTOR TO APPLY 'KOPR-SHIELD' TO ALL CONNECTIONS

NOTE:
CONTRACTOR TO INSTALL/REPLACE NEW OR MISSING GROUND BARS AS REQUIRED.

GROUND BAR DETAIL

SCALE: NONE

3

T-Mobile

NTPWIRELESS
EVERY SITE. EVERY DAY

ML70554A
HOST WT LAKE GENEVA
1003 HOST DRIVE,
LAKE GENEVA, WI 53147

WT GROUP
Engineering with Precision, Pace and Passion.
2675 Pratum Avenue | Hoffman Estates, IL 60192
T: 224.293.3311 F: 224.293.0444
wtengineering.com

WT Group
Engineering • Design • Consulting

© COPYRIGHT 2022 THE W-T GROUP, LLC

WISCONSIN
JEFF S. GUTOWSKY
35509-006
HOFFMAN ESTATES, IL
PROFESSIONAL ENGINEER

EXPIRES: 07/31/22 SIGNED: 01/10/22

REVISIONS

REV.	ISSUED FOR	DATE	BY
A	FOR CLIENT REVIEW	08/14/20	PS
0	FINAL	09/04/20	KLO
1	REVISION	09/08/20	KLO
2	REVISION	09/10/20	JTB
B	REVISION	06/29/21	SC
3	SA REVISION	07/21/21	KLO
4	REVISION	01/10/22	JTB

AQUATIC \ DESIGN & PROGRAM MANAGEMENT
CIVIL \ TELECOMMUNICATION \ MECHANICAL
PLUMBING \ ELECTRICAL \ LAND SURVEYING
ACCESSIBILITY CONSULTING \ STRUCTURAL

CHECK: JKR
DRAWN: PS
JOB: 2001125T

GR-2
GROUNDING DETAILS

WT Group
Engineering • Design • Consulting

January 10, 2022

Joseph T. Hoban, P.E.
Dixon Engineering, Inc.
4811 S. 76th Street, Suite 109
Greenfield, WI 53220

Re: Lake Geneva Utility Commission
Site Number: ML70554A
1003 Host Drive
Lake Geneva, WI 53147
W-T#: 2001125T

Mr. Hoban,

Pursuant to your request we have made the following revisions to plans dated 01/10/2022 for the above project per review comments prepared by the Village of Glenview dated 12/20/2021:

Review comments:

A. The structural calculations for the tank have been reviewed.

1. The structural calculations are stamped and signed by a Licensed Professional Engineer in the State of Wisconsin.
2. This document with the date is referenced on Sheet A-1 in the design drawings. This date needs to be updated to match the final structural calculations for the project.
3. The calculations are limited to a comparison of the effective projected areas of the proposed versus existing antennas. This is not sufficient to show that the installation meets the required code requirement. If W-T Group were to provide their own previous calculations that showed the tower could support what is existing on the tower and were able to show that the proposed installation does not create an increase in wind load or overturning moment this may be acceptable. Otherwise, the analysis should show that original tower loading versus the added antenna loading (including anything that was not originally on the tower). If that exceeds the 10% allowed by IEBC, they will need to provide additional calculations.
4. Tower calculations need to be performed per AWWA D100.

Response: *See the structural response letter for answers to the questions above.*

B. The structural mount analysis for the tank has been reviewed.

1. The structural mount analysis is stamped and signed by a Licensed Professional Engineer in the State of Wisconsin.

2. This document with the date is referenced on Sheet A-1 in the design drawings. This date needs to be updated to match the final structural calculations for the project.
3. The loads for the antennas in the mount analysis should be offset from the pole to model the installation more accurately. The center of the antennas is not in line with the poles and will impart an eccentric loading on the structure.
4. The stresses imparted on the roof plate by the antenna mount need to be investigated as part of the analysis.

Response: *See the structural response letter for answers to the questions above.*

C. The design drawings are stamped and signed by a Licensed Professional Engineer in the State of Wisconsin.

Response: *No response*

D. The property owner information on the cover sheet (T-1) needs to be filled in. There currently are (3) T.B.D.s in the box.

Response: *The property owner information has been filled in on T-1.*

E. Below is a photo of a typical T-Mobile sector on the outer edge of the roof.

Response: *No response.*

F. Below is a project summary for the tank per the "Project Description" on Sheet T-1 and Details 1 & 2 on Sheet A-2:
   1. (3) existing antennas to be removed.
   2. (3) existing FRIJ radios to be removed.
   3. (3) existing FXFC radios to be removed.
   4. (3) existing COVPs to be removed.
   5. (15) existing coax cables to be removed.
   6. (3) existing HCS (hybrid cables) to be removed.
   7. (3) existing antennas to remain.
   8. (3) new AEHC antennas to be installed (see detail 4 on Sheet A-4).
   9. (2) new breakout boxes to be installed (see detail 2 on Sheet A-3).
   10. (3) new AHFIGs to be installed (see detail 3 on Sheet A-4).
   11. (2) new HCS 2.0 hybrid trunks to be installed.

Response: *No response.*

G. There is a note on Sheet A-2 that says "contractor to replace existing antenna mast pipe with new mast pipe to accommodate new antenna". This note needs to be removed. If any new mast pipes are required details with their dimensions and how they will be installed/attached would be required.

Response: *The note referencing above has been removed.*

H. The exterior ends of the T-Mobile penetration pipes at the top of the access tube need to be properly sealed. The penetration pipes at the top of the access tube need to be sealed with rubber boot assemblies and or weather resistant caulk to a depth of 2" on the exterior ends. Spray foam, butyl, and tape are not acceptable alternatives. Unused penetration pipes need to be sealed with solid rubber boots. These requirements need to be included in the design drawings.

Response: *A note to reference the above has been added to A-1 & A-2.*

I. There are "General Paint Notes" on Sheet T-3. There are several revisions required to the series numbers for Tnemec projects.
   1. Change Series 66 to Series N140 (exterior and dry interior).
   2. Change Series 1074 and 1074UV to Series 1095 (exterior only).

Response: *Revisions have been made to the general paint notes on T-3 to match the above.*

I trust this meets with your needs and if you have any questions please do not hesitate to call.

Regards,
Katie Olesen
Senior Project Manager

WT Group
Engineering • Design • Consulting

January 7, 2022

Josh Gajewski
Utility Director
Lake Geneva Utility Commission
361 Main Street
Lake Geneva, WI 53147

Re: Lake Geneva Utility Commission
T-Mobile (ML70554A)
Host Composite Tank
W-T Job Number: 2001125T

To Whom it May Concern,

Pursuant to your request, we have made the following revisions to the Structural Calculations and Structural Mount Analysis dated 07/16/2021 for the above project per the review comments prepared on 12/20/2021:

Structural Calculations Comments:

1. *The structural calculations are stamped and signed by a Licensed Professional Engineer in the State of Wisconsin.*

Response: No response required.

2. *This document with the date is referenced on Sheet A-1 in the design drawings. This date needs to be updated to match the final structural calculations for the project.*

Response: The date on sheet A-1 is updated.

3. *The calculations are limited to a comparison of the effective projected areas of the proposed versus existing antennas. This is not sufficient to show that the installation meets the required code requirements. If W-T Group were to provide their own previous calculations that showed the tower could support what is existing on the tower and were able to show that the proposed installation does not create an increase in wind load or overturning moment this may be acceptable. Otherwise, the analysis should show the original tower loading versus the added antenna loading (including anything that was not originally on the tower). If that exceeds the 10% allowed by IEBC, they will need to provide additional calculations.*

Response: This analysis is not meant to compare against the original analysis, but to highlight the decrease in surface area and weight of the appurtenances compared to the existing T-Mobile loading currently installed on the tank. If it is still the opinion of Dixon Engineering that a full analysis is required, W-T will provide.

4. *Tower calculations need to be performed per AWWA D100.*

Response: See response to comment #3.

Structural Mount Analysis Comments:

1. *The structural mount analysis is stamped and signed by a Licensed Professional Engineer in the State of Wisconsin.*

Response: No response required.

2. *This document with the date is referenced on Sheet A-1 in the design drawings. This date needs to be updated to match the final structural calculations for the project.*

Response: The date on sheet A-1 is updated.

3. *The loads for the antennas in the mount analysis should be offset from the pole to model the installation more accurately. The center of the antennas is not in line with the poles and will impart an eccentric loading on the structure.*

Response: The antenna loads are updated in RISA 3D to reflect an offset from the mounting poles. The mount analysis is updated to reflect this change.

4. *The stresses imparted on the roof plate by the antenna mount need to be investigated as part of the analysis.*

Response: The existing fillet welded connection is checked on page 32 of the Structural Mount Analysis.

I trust this meets with your needs and if you have any questions please do not hesitate to call.

Regards,

Geoffrey Golly
Project Engineer, Structural Engineering

Structural Engineering
2675 Pratum Avenue | Hoffman Estates, IL 60192
PH: (224) 293-6333 | www.wtengineering.com

SITE NO:	ML70554A
SITE NAME:	HOST WT LAKE GENEVA
SITE ADDRESS:	1003 HOST DRIVE LAKE GENEVA, WI 53147

W-T GORUP JOB NO: 2001125T

STRUCTURAL CALCULATIONS

DATE:	09/03/2020
REV. DATE:	07/16/2021
REV. 2 DATE:	01/07/2022

The calculations included herein, as listed above, were prepared by me, or under my direct supervision, and to the best of my knowledge; comply with the requirements of all applicable codes and ordinances.

Jeff Gutowsky, P.E.
Wisconsin P.E. License No. 35509-006
Expires: 07-31-22

INDEX OF CALCULATIONS

RESULTS SUMMARY **3**
PROPOSED/EXISTING APPURTENANCE **4**
STANDARD CONDITIONS AND ASSUMPTIONS **7**
STRUCTURAL CALCULATIONS **8**
OVERVIEW 9
APPLICABLE CODES AND LOAD COMBINATIONS 9
MATERIAL SPECIFICATIONS 10
WATER TANK ANALYSIS 11
EXHIBITS **14**
APPUTENNACE INFORMATION 15
CONSTRUCTION DRAWINGS BY "W-T COMMUNICATIONS DIVISION" DATED 06/29/2021 16
TOWER MAPPING REPORT BY "HIGHTOWER SOLUTIONS, INC" DATED 07/31/2019 18

RESULTS SUMMARY

Element/ Location	% Change in EPA	% Change in Weight
Water Tank	-3.1% < 5% OK	-0.3% < 5% OK

CONCLUSION

A number of limit states has been checked for the adequacy of the water tank structural components with existing and proposed antennas. Based on the percent change in wind and dead loading, the existing water tank is ***structurally adequate*** to support the existing and proposed antennas and RRUs load. A separate mount analysis has been performed by "W-T Group", 07/16/2021 to analyze the mount frame at 131'-4" elevation.

PROPOSED/EXISTING LOADING:

Carrier	*Elevation*	*Status*	*Qty.*	*Appurtenance Description*	*Weight (lbs)*	*Coax*
Unknown	± 44'-10"	Existing	1	5 Element Yagi Antenna (13.0" x 13.0" x 32.0")	15.0*	(1) 0.40"
	± 50'-4"		1	Whip Antenna (42.0" x 1.25" Dia.)	10.0*	(1) 1/2"
	± 50'-11"		1	Whip Antenna (108.0" x 1.50" Dia.)	15.0*	(1) 1/2"
AT&T	± 125'-0"	Existing	3	Commscope SBJAH4-1D65B-DL (72.0" x 12.0" x 8.0")	60.0*	(12) 0.80" (1) 1/2" (6) AVA7-50
			6	Ericsson RRU RRUS 32 (23.0" x 12.0" x 7.0")	45.0*	
			1	GPS (5.0" x 3.50" Dia.)	3.0*	
			6	Andrew SBNHH-1D65C (96.0" x 12.0" x 7.50")	60.0*	
			3	Ericsson RRUS 11 B4 (17.0" x 17.0" x 7.0")	45.0*	
			3	Ericsson RRUS Expansion A2 B4 (13.0" x 15.0" x 3.50")	45.0*	
			3	Ericsson RRUS 11 B12 (17.0" x 17.0" x 7.0")	45.0*	
			3	Ericsson RRUS 11 B5 (17.0" x 17.0" x 7.0")	45.0*	
			6	Strikesorb Junction Box DC2 (10.0" x 10.0" x 6.50")	8.0*	
			3	Strikesorb Junction Box FC12 (14.0" x 16.0" x 6.50")	8.0*	
			3	Raycap DC2-48-60-0-9E (10.0" x 10.0" x 6.50")	15.0*	
			3	Andrew DBXLH-8585B-R2M (73.0" x 12.0" x 7.50")	60.0*	
			6	TMA (11.0" x 14.0" x 4.0")	15.0*	
Sprint	± 125'-0"	Existing	3	KMW FL-X-WM-1865-8p (60.0" x 12.0" x 4.0")	60.0*	(16) HFC 6A2-8A6
			3	KMW ET-X-TS-70-16-62-18-1R-RD (72.0" x 12.0" x 6.0")	60.0*	
			3	Samsung RRH SLS-BD10JQ (21.0" x 14.0" x 8.0")	45.0*	
			3	Samsung RRH SMM-2CR0480800 (18.0" x 16.0" x 7.0")	45.0*	

Sprint	± 125'-0"	Existing	3	Samsung RRH (24.0" x 15.0" x 9.0")	45.0*	
T-Mobile	**± 131'-4"**	**Proposed**	**3**	**AEHC Massive MIMO w/ Integrated RRU(s) (38.2" x 21.5" x 5.9")**	**108.0**	(3) Hybrid Cable, (1) HCS 2.0 Trunk
			3	**AHFIG (27.3" x 12.1" x 5.2")**	**70.5**	
			2	**Breakout Box (16.06" x 9.3" x 4.88")**	**7.91**	
		Existing	3	Andrew TMBXX-6516-A2M (59.6" x 12.0" x 6.5")	34.6	
Verizon	± 132'-3"	Existing	6	Ericsson RRUS 32 (23.0" x 12.0" x 7.0")	45.0*	(12) 1 5/8"
			6	Commscope NHH-65C-R2B (96.0" x 12.0" x 8.0")	60.0*	
			3	Commscope HBX-9016DS-VTM (75.0" x 7.0" x 4.0")	60.0*	
			6	TMA (8.0" x 6.0" x 2.0")	15.0*	
			3	Raycap RC3DC-3315-PF-48 (19.0" x 16.0" x 10.0")	15.0*	
Unknown	± 133'-9"	Existing	1	Whip Antenna (27.0" x 1.5" Dia.)	10.0*	(2) LCF78-50J (4) 1/2"
			3	Airmax AM-M-V5G-Ti (15.0" x 7.0" x 5.0")	30.0*	
			1	15" Dish (15.0" Dia. x 9.0")	15.0*	
			1	Airfire Dish (15.0" Dia. x 9.0")	5.0*	
			3	TMA (10.0" x 8.0" x 2.0")	5.0	
			1	16" Dish (16.0" Dia. x 8.0")	10.0*	
			3	UBIQUITI Dish (8.0" Dia. x 9.0")	10.0*	
			1	Whip Antenna (60.0" x 1.0" Dia.)	10.0*	
			1	2 Element Dipole Antenna (120.0" x 5.0" x 5.0")	45.0*	
			1	Airfiber Dish (16.0" Dia. x 8.0")	45.0*	
			2	Manairco Small Beacons (12.0" x 12.0" x 5.0")	10.0*	

* Weight assumed

**Existing loading and dimensions obtained from tower mapping report by "Hightower Solutions, Inc.", dated 07/31/2019

DESIGN LOADS

Wind: 90 mph (3 sec. gust) as per the TIA-222-G standard or 30 psf minimum for antennas. 100 mph (3 sec. gust) as per AWWA D100-11 for the water tank.

STANDARD CONDITIONS AND ASSUMPTIONS

This analysis is based on the theoretical capacity of the members and is not a condition assessment of the tower. The analysis is based solely on the information supplied, and the results, in turn, are only as accurate as data extracted from this information. We were provided with the tower and loading information and assume the information supplied is accurate. The W-T Group, LLC has made no independent determination of its accuracy. The following assumptions were made for this structural analysis:

1. No allowance was made for any damaged, missing, or rusted members. The existing tower is assumed to have been properly maintained in accordance with the TIA/EIA Standard, AWWA Standard and/or its original manufacturer's recommendations. The existing tower is assumed to be in good condition with no structural defects and with no deterioration to its member capacities. The tower member sizes and geometry are considered accurate as supplied. The material grade is as per data supplied and/or as assumed and stated in the materials section.

2. The structural analysis by the W-T Group, LLC verifies the adequacy of the main structural members of the tower. The W-T Group, LLC. provides a limited scope of service in that we cannot verify the adequacy of every structural sub-component such as; mounting frames, bolts, welds, plate connections, etc., all bolts, welds and connections are assumed to develop at least the member capacity, unless determined otherwise and explicitly stated in this report.

3. All prior structural modifications, if any, are assumed to be as per date supplied/available, to be properly installed and to be fully effective.

4. This tower has been analyzed according to the original design criteria or the minimum design wind loads recommended by the Telecommunications Industry Association Standard TIA/EIA-222-G and American Water Works Association AWWA D100-11 Standard. If the owner or local or state agencies require a higher design wind load, W-T Communication Design Group, Inc. should be made aware of this requirement.

5. The antenna configuration is as supplied and/or stated in the analysis section. It is assumed to be complete and accurate. All antennas, mounts, coaxial cables and waveguides are assumed to be properly installed and supported as per the manufacturer's requirements.

6. Some assumptions are made regarding antenna and mount sizes and their projected areas based on the best interpretation of the data supplied and the best knowledge of antenna type and industry practice. Miscellaneous items such as antenna mounts etc. have not been structurally verified, designed or detailed as a part of our work. We recommend the owner or contractor verify that the mount has been constructed by a suitable/reputable manufacturer and meets the loading requirements specified.

7. The existing foundation is assumed to be in good condition with no structural defects and with no deterioration to its member capacities. The foundation system is assumed to support the structure as originally designed.

Structural Engineering
2675 Pratum Avenue | Hoffman Estates, IL 60192
PH: (224) 293-6333 | www.wtengineering.com

SITE NO:	ML70554A
SITE NAME:	HOST WT LAKE GENEVA
SITE ADDRESS:	1003 HOST DRIVE LAKE GENEVA, WI 53147

W-T GROUP JOB NO: 2001125T

STRUCTURAL CALCULATIONS

DATE:	09/03/2020
REV. DATE:	07/16/2021
REV. 2 DATE:	01/07/2022

MOUNT CAPACITY LEVEL: **32.9% (PASS)**

The calculations included herein, as listed above, were prepared by me, or under my direct supervision, and to the best of my knowledge; comply with the requirements of all applicable codes and ordinances.

WISCONSIN
JEFF S. GUTOWSKY
35509-006
HOFFMAN ESTATES, IL
PROFESSIONAL ENGINEER

Jeff Gutowsky, P.E.
Wisconsin P.E. License No. 35509-006
Expires: 07-31-22

INDEX OF CALCULATIONS

SUMMARY LETTER **3**
STRUCTURAL CALCULATIONS **5**
OVERVIEW 6
APPLICABLE CODES AND LOAD COMBINATIONS 6
MATERIAL SPECIFICATIONS 7
ANTENNA WIND LOADING 8
MOUNT ANALYSIS (RISA 3-D) 15
3-D VIEW 15
NODE NUMBERS 16
MEMBER LABELS 17
MEMBER SHAPES 18
DEAD LOAD 19
DEAD LOAD (ICE) 20
WIND LOAD X-DIRECTION 21
WIND LOAD Z-DIRECTION 22
WIND LOAD X-DIRECTION (ICE) 23
WIND LOAD Z-DIRECTION (ICE) 24
MEMBER STRESS RATIO 25
CALCULATION REPORT 26
EXISTING CONNECTION CHECK 32
EXHIBITS **33**
APPURTENANCE INFORMATION 34
CONSTRUCTION DWGS BY "W-T COMMUNICATIONS DIVISION" DATED 06/29/2021 35
TOWER MAPPING REPORT BY "HIGHTOWER SOLUTIONS, INC." DATED 07/31/2019 37

WT Group
Engineering • Design • Consulting

January 7, 2022

The W-T Group, LLC
Communications Division
2675 Pratum Avenue
Hoffman Estates, IL 60192

Attn: Katie Olesen

Re: Subject: Structural Mount Analysis Letter
Site No: ML70554A
Site Name: Host WT Lake Geneva
Address: 1003 Host Drive, Lake Geneva, WI 53147
W-T Group Job No: 2001125T

Dear Katie:

The Conclusions and recommendations made in this letter are based on the following assumptions:

- The structure(s) have been built in accordance with applicable building codes and have been properly maintained.
- The existing mount members and connection hardware are free of deficiencies and are capable of supporting the original equipment loads.
- The T-Mobile structure was constructed in accordance with industry standards and expected construction workmanship and that the construction followed the intent of the original design. Throughout the life of the project, no structural member was modified intentionally or not.
- Our scope is limited to verify the antenna mount frame for the proposed new antennas and RRUs. This letter does not accept or imply any liability for the original design of the antenna support structure design and installation. The liability remains with the original Structural Engineer of record and the installation contractor.
- It is understood that the new equipment will be installed after the existing respective equipment is removed.

Applicable Codes and References:
2015 International Building Code
ASCE 7-10 Minimum Design Loads for Buildings and Other Structures
ANSI-TIA-222-G Standard
AISC Steel Construction Manual Fourteenth Edition

Antenna Mount Structure Summary:
"The W-T Group, LLC (WTG)" has performed a structural analysis of the existing mount frames for proposed new and existing antennas. The existing and proposed antennas and RRUs are included in the loading table below. New T-Mobile antenna/RRU additions shall be mounted as

specified in the construction documents issued by "W-T Communications Division" dated 06/29/2021. The mount information was obtained from the mapping report prepared by "Hightower Solutions, Inc." dated 07/31/2019. It shall be noted that the mount pipe location on the handrail has been assumed.

Proposed/Existing Loading:

Description	*Appurtenance*	*Qty.*	*Weight (lbs)*	*Elevation (AGL)*
Proposed	**AEHC Massive MIMO w/ Integrated RRU(s) (38.2" x 21.5" x 5.9")**	**3**	**108.0**	± 131'-4"
	AHFIG (27.3" x 12.1" x 5.2")	**3**	**70.5**	
	Breakout Box (16.06" x 9.3" x 4.88")	**2**	**7.91**	
Existing	Andrew TMBXX-6516-A2M (59.6" x 12.0" x 6.5")	2	34.6	

* Coax – (1) HCS 2.0 Trunk

Overall Conclusion:

The Existing Antenna Mount Frame Passes at 32.9% of Available Capacity.

Based on our structural analysis performed by "The W-T Group, LLC", the existing antenna mount frame is ***structurally adequate*** to support the proposed new and existing antenna and RRHs. The antenna mount platform is supported by an existing water tank and the water tank is structurally adequate to support the proposed new and existing antenna and RRHs.

The engineering services are performed on the basis that the information used is current, complete and correct. The information may consist of, but not limited to information supplied by the client regarding the structure itself. It is the responsibility of the client to ensure that the information provided to "The W-T Group, LLC" is correct and complete. All services are performed, results obtained and recommendations made in accordance with the generally accepted engineering principles and practices.

We appreciate the opportunity to be of service on this project. Please do not hesitate to contact us with any questions or concerns.

Regards,
The W-T Group, LLC

Geoffrey Golly

Geoffrey Golly
Project Engineer, Structural Engineering

From:	Julie Shebek
To:	Josh Gajewski
Subject:	US Cellular - Lake Geneva North II/786625 -proposed tower Zoning Drawings
Date:	Tuesday, January 4, 2022 7:45:41 AM
Attachments:	Lake_Geneva_North_II_(786625)_RevZoning_Drawings_2022-01-03.pdf
Importance:	High

CAUTION: This email originated from outside the organization.
Do not click links or open attachments unless you recognize the sender and know the content is safe.

Josh,

Attached is a zoning drawing of what US Cellular is proposing:

- To achieve the 150' CL we are proposing a 155' monopole
- We are proposing the RRUs on the existing USCC mount to allow for T-Mobile to achieve a 140' CL and clear the WT.
- We have identified the monopole location in the NE corner of the property for the following reasons:
    - It is very close to the USCC shelter.
    - T-Mobile will have a fairly direct path to this tower location.
    - This will avoid routing/disturbing the existing concrete drive.
    - This will keep all of the communication installations at the rear and east side of the WT.
    - If there is a future need there is space for another colocator to the north of the tower.
- USCC buried conduits extending to WT to now remain
- USCC CDMA antennas on top of WT to remain
- USCC LTE antennas to be removed once monopole is up and running

I know you and your team will be discussing the ownership of the tower. Again, US Cellular would like to own and construct.
have not addressed any lease area expansion for the tower – ownership will impact this.

Let me know if you have any questions.

Thank you,
Julie Shebek
First American Site Acquisition, Inc.
On behalf of US Cellular
319-721-0411

SCOPE OF WORK

TOWER SCOPE		
TO BE REMOVED		
	EQUIPMENT	ACTION
ANTENNA(S)/EQUIP.	PANEL ANTENNA(S)	TO BE REMOVED
	EQUIPMENT	TO BE REMOVED
TRANSMISSION CABLE(S)	USCC CABLE(S)	TO BE REMOVED
COAX JUMPERS:	EXISTING COAX JUMPERS	TO BE REMOVED
TO BE INSTALLED		
ANTENNA(S)/EQUIP.	155' MONOPOLE & FOUNDATION	TO BE INSTALLED
	ANTENNA PLATFORM	TO BE INSTALLED
	LIGHTNING ROD	TO BE INSTALLED
GROUND BAR(S):	EQUIPMENT GROUND BARS	TO BE INSTALLED

COMPOUND SCOPE		
	EQUIPMENT	ACTION
CABLE ROUTE:	ICE BRIDGE	TO BE INSTALLED
GROUND BAR(S):	SHELTER EXTERIOR GROUND BAR*	TO BE INSTALLED

SHELTER INTERIOR SCOPE		
TO BE INSTALLED		
CABLE ROUTE:	SHELTER COAX PORT	TO BE INSTALLED
GROUND BAR(S):	GROUND BAR AT COAX PORT*	TO BE INSTALLED

uscellular

LAKE GENEVA NORTH II (786625)
LAKE GENEVA, WISCONSIN
ZONING DRAWINGS
155' MONOPOLE

SITE LOCATION MAP

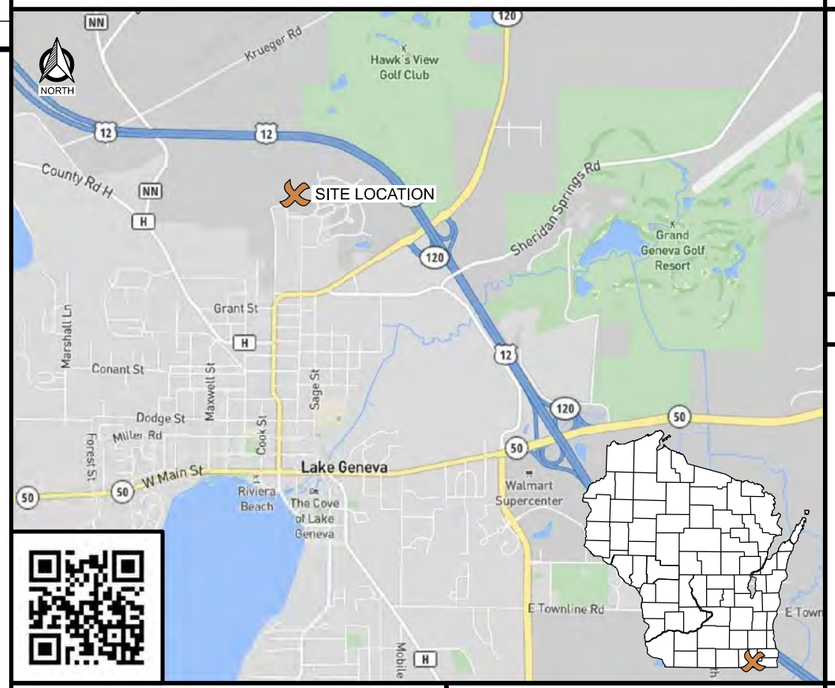

DIRECTORY

CLIENT:
U.S. CELLULAR
8410 W. BRYN MAWR AVE., SUITE 700
CHICAGO, IL 60631
CONTACT: ELIZABETH BAILEY

ENGINEERING COMPANY:
EDGE CONSULTING ENGINEERS, INC.
624 WATER STREET
PRAIRIE DU SAC, WI 53578
PROJECT MANAGER: DAVE LYSHEK

SITE ACQUISITION:
SITE ACQUISITION SOLUTIONS
19730 BELLBROOK BLVD.
GRETNA, NE 68028
CONTACT: JULIE SHEBEK

PROJECT INFO

SITE LOCATION:
750 WILDRIDGE DRIVE
LAKE GENEVA, WI
WALWORTH COUNTY

SITE #: 786625

EXISTING WATER TOWER OWNER:
LAKE GENEVA UTILITY COMMISION
361 W. MAIN STREET
LAKE GENEVA, WI 53147

PROPOSED MONOPOLE OWNER:
U.S. CELLULAR
8410 W. BRYN MAWR AVE., SUITE 700
CHICAGO, IL 60631

SITE COORDINATES:
LAT: 42.61066398°
LONG: -88.43428116°

SHEET INDEX

NO.:	SHEET TITLE
G-001	TITLE SHEET
C-101	SITE PLAN
C-102	ENLARGED SITE PLAN
T-201	SITE ELEVATION

CONTRACTOR SHALL VERIFY ALL PLANS AND EXISTING DIMENSIONS/CONDITIONS ON SITE. IMMEDIATELY NOTIFY ENGINEER OF ANY DISCREPANCIES PRIOR TO PERFORMING ANY WORK OR BE RESPONSIBLE FOR THE SAME.

STRUCTURAL

INVENTORY REPORT:
EDGE CONSULTING ENGINEERS, INC.
REPORT #: TBD DATED:

TOWER ANALYSIS:
EDGE CONSULTING ENGINEERS, INC.
REPORT #: TBD DATED:
CONCLUSION:

MOUNT ANALYSIS (REPLACEMENT/EXISTING):
EDGE CONSULTING ENGINEERS, INC.
REPORT #: TBD DATED:
CONCLUSION:

TO BE COMPLETED

CONTRACTOR TO REVIEW STRUCTURAL REPORT IN ITS ENTIRETY. ANY DISCREPANCIES OR DISAGREEMENTS BETWEEN THE REPORT AND THESE PLANS SHOULD BE RESOLVED PRIOR TO CONSTRUCTION.

ONE CALL SYSTEMS INTERNATIONAL

TO OBTAIN LOCATION OF PARTICIPANTS' UNDERGROUND FACILITIES BEFORE YOU DIG IN WISCONSIN, CALL DIGGERS HOTLINE

TOLL FREE: 1-800-242-8511
FAX A LOCATE: 1-800-242-5811

WI STATUTE 182.0175 (1974) REQUIRES MIN. OF 3 WORK DAYS NOTICE BEFORE YOU EXCAVATE

ENGINEER SEAL:

I HEREBY CERTIFY THAT THIS PLAN SET WAS PREPARED BY ME OR UNDER MY DIRECT SUPERVISION OTHER THAN THE EXCEPTIONS NOTED IN THE SHEET INDEX, AND THAT I AM A DULY LICENSED PROFESSIONAL ENGINEER UNDER THE LAWS OF THE STATE OF WISCONSIN.

SIGNATURE: _____

DATE: _____

CONSULTANT:
Edge Consulting Engineers, Inc.
624 WATER STREET
PRAIRIE DU SAC, WI 53578
608.644.1449 VOICE
608.644.1549 FAX
www.edgeconsult.com

CLIENT:
uscellular
U.S. CELLULAR
8410 W. BRYN MAWR AVE.
SUITE 700
CHICAGO, IL 60631

TITLE SHEET
LAKE GENEVA NORTH II (786625)
LAKE GENEVA, WISCONSIN

SUBMITTAL:

INT.	DATE:	DESCRIPTION:
NAT	01/03/22	ZD REV. A

CHECKED BY	DCL
PLOT DATE	1/3/2022
PROJECT NUMBER	31977
SET TYPE	ZD
SHEET NUMBER	G-001

k:\31900\31977\Design\CAD\Zoning_Drawings\Plot\G-001.dgn

© EDGE CONSULTING ENGINEERS, INC

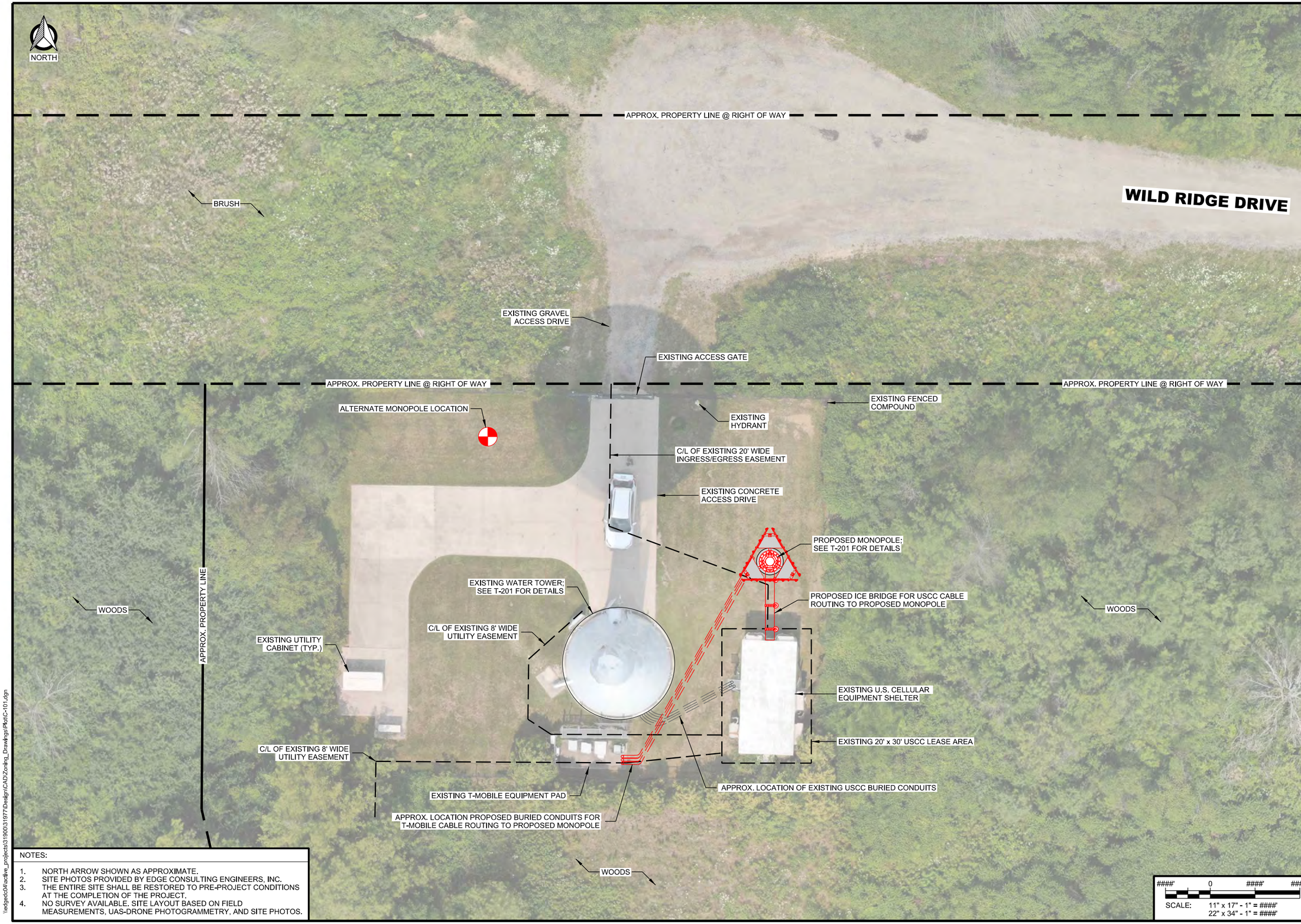

NOTES:

1. NORTH ARROW SHOWN AS APPROXIMATE.
2. SITE PHOTOS PROVIDED BY EDGE CONSULTING ENGINEERS, INC.
3. THE ENTIRE SITE SHALL BE RESTORED TO PRE-PROJECT CONDITIONS AT THE COMPLETION OF THE PROJECT.
4. NO SURVEY AVAILABLE. SITE LAYOUT BASED ON FIELD MEASUREMENTS, UAS-DRONE PHOTOGRAMMETRY, AND SITE PHOTOS.

\\edgedc04\active_projects\31900\31977\Design\CAD\Zoning_Drawings\Plot\C-101.dgn

CONSULTANT:
Edge
Consulting Engineers, Inc.
624 WATER STREET
PRAIRIE DU SAC, WI 53578
608.644.1449 VOICE
608.644.1549 FAX
www.edgeconsult.com

CLIENT:
uscellular
U.S. CELLULAR
8410 W. BRYN MAWR AVE.
SUITE 700
CHICAGO, IL 60631

SITE PLAN
LAKE GENEVA NORTH II (786625)
LAKE GENEVA, WISCONSIN

SUBMITTAL:

INT.	DATE:	DESCRIPTION:
NAT	01/03/22	ZD REV. A

CHECKED BY	DCL
PLOT DATE	1/3/2022
PROJECT NUMBER	31977
SET TYPE	ZD
SHEET NUMBER	C-101

© EDGE CONSULTING ENGINEERS, INC

A COMPOUND OVERVIEW

B COMPOUND OVERVIEW

C USCC PORT

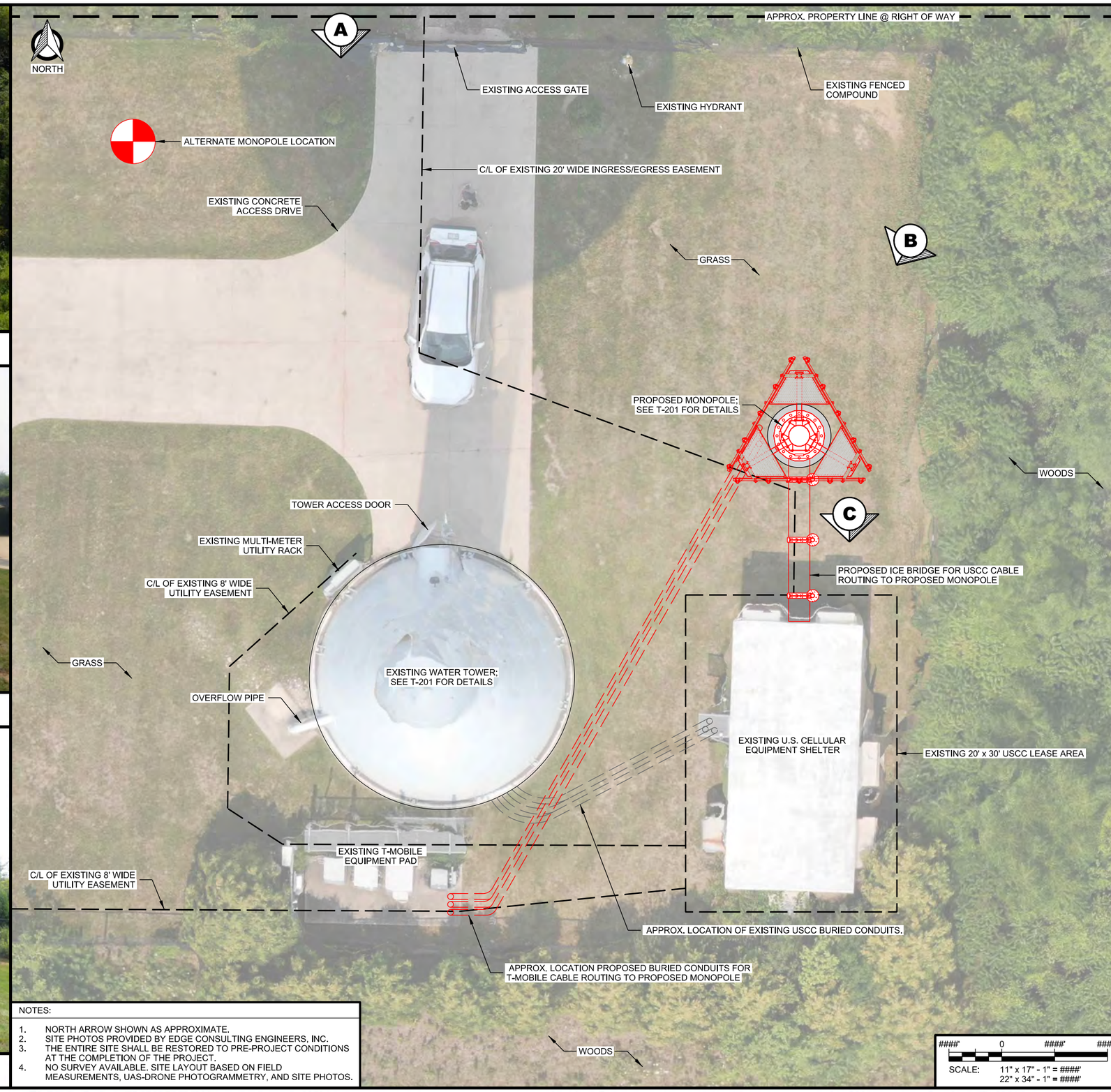

NOTES:

1. NORTH ARROW SHOWN AS APPROXIMATE.
2. SITE PHOTOS PROVIDED BY EDGE CONSULTING ENGINEERS, INC.
3. THE ENTIRE SITE SHALL BE RESTORED TO PRE-PROJECT CONDITIONS AT THE COMPLETION OF THE PROJECT.
4. NO SURVEY AVAILABLE. SITE LAYOUT BASED ON FIELD MEASUREMENTS, UAS-DRONE PHOTOGRAMMETRY, AND SITE PHOTOS.

' 0 #### ' ####'

SCALE: 11" x 17" - 1" = ####'
22" x 34" - 1" = ####'

CONSULTANT:
Edge Consulting Engineers, Inc.
624 WATER STREET
PRAIRIE DU SAC, WI 53578
608.644.1449 VOICE
608.644.1549 FAX
www.edgeconsult.com

CLIENT:
uscellular
U.S. CELLULAR
8410 W. BRYN MAWR AVE.
SUITE 700
CHICAGO, IL 60631

ENLARGED SITE PLAN
LAKE GENEVA NORTH II (786625)
LAKE GENEVA, WISCONSIN

SUBMITTAL:

INT.	DATE:	DESCRIPTION:
NAT	01/03/22	ZD REV. A

CHECKED BY	DCL
PLOT DATE	1/3/2022
PROJECT NUMBER	31977
SET TYPE	ZD
SHEET NUMBER	C-102

\\edgedc04\active_projects\31900\31977\Design\CAD\Zoning_Drawings\Plot\C-102.dgn

© EDGE CONSULTING ENGINEERS, INC.

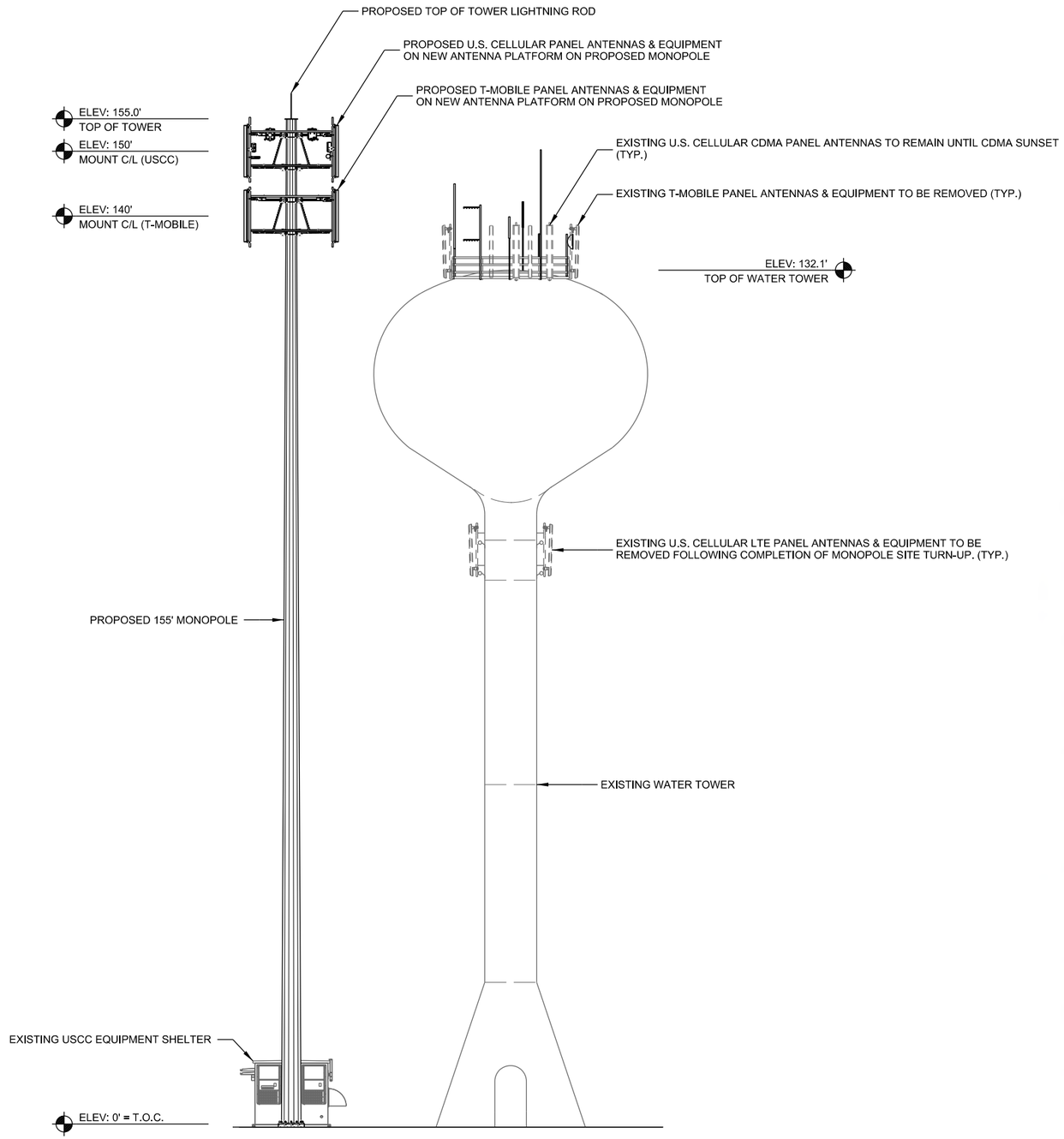

NOTE:

1. WATER TOWER ELEVATIONS ARE BASED ON original TOWER FABRICATION PLANS. HEIGHTS ARE ROUNDED TO THE NEAREST 0.1'

A **PROPOSED SITE ELEVATION**

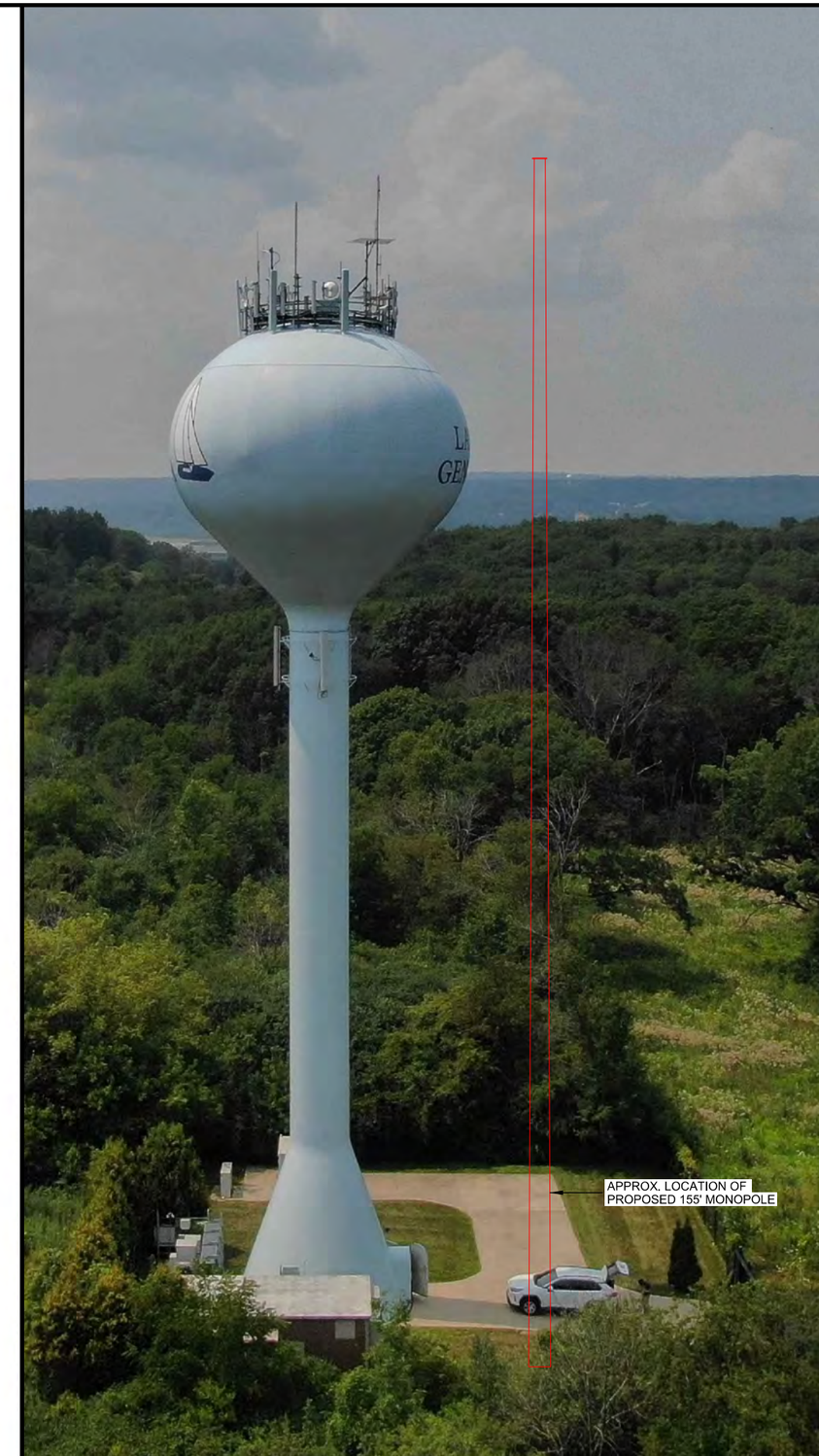

B **EXISTING SITE ELEVATION**

CONSULTANT:
Edge Consulting Engineers, Inc.
624 WATER STREET
PRAIRIE DU SAC, WI 53578
608.644.1449 VOICE
608.644.1549 FAX
www.edgeconsult.com

CLIENT:
uscellular
U.S. CELLULAR
8410 W. BRYN MAWR AVE.
SUITE 700
CHICAGO, IL 60631

SITE ELEVATION
LAKE GENEVA NORTH II (786625)
LAKE GENEVA, WISCONSIN

SUBMITTAL:

INT.	DATE:	DESCRIPTION:
NAT	01/03/22	ZD REV. A

CHECKED BY	DCL
PLOT DATE	1/3/2022
PROJECT NUMBER	31977
SET TYPE	ZD
SHEET NUMBER	T-201

\\edgedc04\active_projects\31900\31977\Design\CAD\Zoning_Drawings\Plot\T-201.dgn

© EDGE CONSULTING ENGINEERS, INC.

Addendum to the PIP application for Covenant Harbor

Flow tests

A flow test has been completed by Mared Mechanical, a company previously contracted by the City of Lake Geneva, at the fire hydrant approximately 70 feet south of the location of the proposed buildings. Dennis Detkowski and Jeff Ecklund have both indicated these tests will be sufficient for submission with the application. Initial flow rates indicate sufficient water flow for the needed sprinkler systems as verified by a representative of Blair Fire Protection (see attached email).

Water and sewer utilities

Covenant Harbor is not seeking a change of responsibility for water and sewer at this time. Covenant Harbor will continue to manage and handle the expense for its private lines. Based on the best information available, any new water or sewer lines required for this project will be the sole responsibility of Covenant Harbor. If at some point in the future, it is deemed by the city and or Covenant Harbor that water and sewer upgrades are required for other projects, such as a future dining hall, Covenant Harbor is willing to enter into negotiations and come up with the solutions needed at that time.

Easements

It is Covenant Harbor's understanding that water and sewer requirements are satisfied (or can be satisfied at Covenant Harbor's expense) for this project without the need for new easements. Further, because Covenant Harbor is expecting to continue the management of private utilities for this project, we consider the easement discussions to not be pertinent to the approval of this PIP application.

However, Covenant Harbor is aware that some clarification regarding all easements pertaining to Covenant Harbor's property will be beneficial to both the City and Covenant Harbor. It is our understanding that some of the rationale for some of the easement agreements are no longer relevant, and therefore, are possibly no longer needed. In one example, one of the easements along the southwest edge of the property near Geneva Bay Estates was most likely put into effect when Covenant Harbor was considering selling that parcel of land in the late 1990s. The selling of this parcel is no longer possible due to constraints placed by the Covenant Harbor board of directors.

To this end, initial discussions have already begun between Matthew Kinney, Facilities Director at Covenant Harbor, and Josh Gajewski on reconciling existing easement records with updated planning and goals of both the city and Covenant Harbor. The intent is to continue to work on this as a separate pursuit, disconnected from the initial PIP project, while still satisfying the city's request.

Vol 633 page 292

Covenant Harbor legal description:

A tract of land situated in the County of Walworth, and State of Wisconsin, described as follows: Beginning at a point in the North and South ¼ line of Section 35, Township 2 North, Range 17 East of the Fourth Principal Meridian which is 11 chains and 34 links North of the South line of said Section measuring on said ¼ line, marked by a stone monument, octagonal at the top, with lead in its center and situated at the North East corner of a tract of land conveyed to Nathaniel K. Fairbank by Mary D. Sturges by deed bearing the date the 18th day of December, 1891; running thence South 4 ½ degrees East 5 chains and 60 links to a second stone monument like the one aforesaid; thence running South 22 ¾ degrees East 2 chains and 30 links, to a third like stone monument, thence running South 78 degrees East 2 chains and 31 links to a fourth like stone monument; thence running South 80 ¼ degrees East 5 chains and 65 links more or less to the waters of Geneva Lake, which last mentioned course passes also through a like fifth stone monument placed in said course at a point therein 360 feet more or less eastward from the fourth stone monument aforesaid; thence North Easterly along the shore of Lake Geneva to the South West corner of a tract of land heretofore conveyed by Shelton Sturges to Levi Z. Leiter by deed bearing date the 28th day of September A.D. 1878 and recorded in the office of the Register of Deeds in and for Walworth County aforesaid, on the 28th day of October 1878 in Volume 63 of Deeds at page 43; running thence North 54 ½ degrees West to a point at the South East corner of a tract of land conveyed to Mary D. Sturges by Levi Z. Leiter by deed bearing date the 6th day of September A.D. 1892 and recorded in the office of the Register of Deeds in and for said Walworth County on the 8th day of December 1892 in Volume 84 of Deeds at page 626; running thence North Westerly along the Easterly boundary of said tract of land to the North Westerly corner thereof; running thence by an arc (convex towards the West) with a radius of 575 feet, whose chord bears North 27 ¼ degrees West 95 feet to a like stone monument; running thence North 17 ¾ degrees West 265 feet to a like stone monument; running thence by an arc (convex towards the west) with a radius of 904 feet whose chord bears North ¾ of a degree West, 366 feet to a like stone monument; running thence by an arc (convex towards the East) with a radius of 387 feet, whose chord bears north 7 ¼ degrees West 263 feet to a like stone monument; running thence North 28 ½ degrees West 107 feet to a like stone monument; running thence by an arc (convex towards the West) with a radius of 598 feet whose chord bears North 5 degrees West 222 feet to a like stone monument; running thence by an arc (convex towards the West) with a radius of 598 feet whose chord bears North 16 ¾ degrees East 259 feet to a point in the center line of Main Street (heretofore known as the "Geneva and Delavan Road") in the City of Lake Geneva in said Walworth County which last mentioned arc extends over a like stone monument placed in the south line of said Main Street; running thence Westerly in the center line of said Main Street 553 feet more or less to the point of intersection of said centerline with the center line of road, running Southerly through the South ½ of section 35 aforesaid; running thence Southerly and Westerly along the centerline of said road to a point in said center line due West of the place of beginning, running thence East 439 feet more or less to the place of beginning.

Gmail

Brad Augustson <baugustson@covenantharbor.org>

Flow test

Mark Bossenbroek <m.bossenbroek@blairfireprotection.com>
To: Brad Augustson <baugustson@covenantharbor.org>

Brad,

Based on the information provided for the available municipal pressure(s) and flow for the automatic sprinkler system, the available supply will be sufficient to provide NFPA-13R system protection. As a side note, th

Let me know if you have any additional questions or concerns.

Thank you,

Mark Bossenbroek

Sales / Project Manager

13111 W. Silver Spring Drive

Butler, WI 53007

Phone: (414) 460-4006

Cell: (414) 299-9915

Fax: (888) 460-8844

http://www.blairfireprotection.com

From: Brad Augustson <baugustson@covenantharbor.org>
Sent: Friday, January 7, 2022 8:17 AM
To: Mark Bossenbroek <m.bossenbroek@blairfireprotection.com>
Subject: Flow test

VICINITY MAP
NTS

SHEET INDEX	
C000	TITLE SHEET & VICINITY MAP
C001	GENERAL NOTES
C100	EXISTING CONDITIONS PLAN
C101	SITE PLAN
C102	GRADING & EROSION CONTROL PLAN
C103	UTILITY PLAN
C500	CONSTRUCTION DETAILS

SITE IMPROVEMENT PLANS FOR

COVENANT HARBOR BIBLE CAMP

LAKE GENEVA, WI

MEMBER ONE CALL SYSTEMS INTERNATIONAL

TO OBTAIN LOCATION OF PARTICIPANTS UNDERGROUND FACILITIES BEFORE YOU DIG IN WISCONSIN
CALL DIGGERS HOTLINE
TOLL FREE
800–242–8511
(414-259-1181 MILWAUKEE METRO)
(TDD: 800-542-2289)
www.diggershotline.com
WIS. STATUTE 182.0175 (1974) REQUIRES MIN. OF 3 WORK DAYS NOTICE BEFORE YOU EXCAVATE.

BENCHMARKS

CONTACT INFORMATION

COMPANY NAME	ADDRESS	CONTACT	PHONE	EMAIL
LYNCH & ASSOCIATES	5482 S. WESTRIDGE DR. NEW BERLIN, WI 53151	TIM LYNCH, P.E.	262.402.5040	TLYNCH@LYNCH-ENGINEERING.COM

REVISIONS

NO.	REVISION	DATE
1	PLAN UPDATES PER ENGINEERS COMMENTS	1/7/2022

SITE IMPROVEMENT PLANS FOR
COVENANT HARBOR BIBLE CAMP
LAKE GENEVA, WI

LYNCH & ASSOCIATES
ENGINEERING CONSULTANTS, LLC

ISSUED FOR REVIEW

PLAN DATE 11.16.21

PROJECT NO.
21.0048

SHEET NO.
C000

A. GENERAL

1. THE CONTRACTOR SHALL NOTIFY THE OWNER, THE ENGINEER, AND THE MUNICIPALITY SEVENTY–TWO (72) HOURS IN ADVANCE OF COMMENCING WORK FOR PROPER CONSTRUCTION COORDINATION.
2. THE CONTRACTOR IS REQUIRED TO NOTIFY THE CITY OF LAKE GENEVA SEWER AND WATER UTILITY AND ENGINEERING DEPARTMENT A MINIMUM OF SEVEN DAYS IN ADVANCE OF WATER MAIN FILLING, WATER MAIN FLUSHING, WATER MAIN TESTING, AND WATER MAIN CONNECTIONS. NO CONNECTION SHALL BE MADE TO THE EXISTING WATER SYSTEM UNTIL SAFE SAMPLES FROM THE NEW MAIN HAVE BEEN OBTAINED. THE CITY OF LAKE GENEVA WILL REQUIRE A METER WHEN FLUSHING THE WATER MAIN AFTER THE PRESSURE TEST AND SAFE WATER SAMPLE IS TAKEN.
3. THE CONTRACTOR SHALL INDEMNIFY THE OWNER, THE ENGINEER, AND THE MUNICIPALITY. THEIR AGENTS, ETC, FROM ALL LIABILITY INVOLVED WITH THE CONSTRUCTION INSTALLATION, AND TESTING OF THE WORK ON THIS PROJECT.
4. SITE SAFETY SHALL BE THE SOLE RESPONSIBILITY OF THE CONTRACTOR.
5. THE BIDDER WILL BE SOLELY RESPONSIBLE FOR DETERMINING QUANTITIES AND SHALL STATE SUCH QUANTITIES IN HIS PROPOSAL. HE SHALL BASE HIS BID ON HIS OWN ESTIMATE OF THE WORK REQUIRED AND SHALL NOT RELY ON THE ENGINEER'S ESTIMATE.
6. THE CONTRACTOR IS RESPONSIBLE FOR VERIFYING SOIL CONDITIONS PRIOR TO COMMENCEMENT OF CONSTRUCTION. A GEOTECHNICAL REPORT IS AVAILABLE FROM THE OWNER. THE CONTRACTOR SHALL ABIDE BY THE RECOMMENDATIONS OF THE GEOTECHNICAL ENGINEER.
7. THE CONTRACTOR IS RESPONSIBLE FOR EXAMINING ALL SITE CONDITIONS PRIOR TO COMMENCEMENT OF CONSTRUCTION AND SHALL COMPARE FIELD CONDITIONS WITH DRAWINGS.
8. THE CONTRACTOR SHALL OBTAIN AND PAY FOR ALL PERMITS REQUIRED FOR EXECUTION OF THE WORK. THE CONTRACTOR SHALL CONDUCT HIS WORK ACCORDING TO THE REQUIREMENTS OF THE PERMITS.
9. THE CONTRACTOR IS RESPONSIBLE FOR FIELD VERIFYING ALL UTILITY INFORMATION SHOWN ON THE PLANS PRIOR TO THE START OF CONSTRUCTION. THE CONTRACTOR SHALL CALL DIGGER'S HOTLINE AT 1–800–242–8511 TO NOTIFY THE UTILITIES OF HIS INTENTIONS, AND TO REQUEST FIELD STAKING OF EXISTING UTILITIES.
10. CONTRACTOR IS ADVISED THAT ALL MUD AND DEBRIS MUST NOT BE DEPOSITED ONTO THE ADJACENT ROADWAYS PER THE REQUIREMENT OF THE MUNICIPALITY OR OTHER APPROPRIATE GOVERNMENT AGENCIES.
11. ANY ADJACENT PROPERTIES OR ROAD RIGHT–OF–WAYS WHICH ARE DAMAGED DURING CONSTRUCTION MUST BE RESTORED BY THE CONTRACTOR. THE COST OF THE RESTORATION IS CONSIDERED INCIDENTAL, AND SHOULD BE INCLUDED IN THE BID PRICES.

B. EROSION CONTROL

1. THE CONTRACTOR IS RESPONSIBLE FOR OBTAINING COPIES OF ALL PERMITS, INCLUDING WPDES DISCHARGE PERMITS (IF APPLICABLE), AND CITY OF LAKE GENEVA EROSION CONTROL PERMIT. CONTRACTOR IS RESPONSIBLE FOR ABIDING BY ALL PERMIT REQUIREMENTS AND RESTRICTIONS.
2. ALL INSTALLATION AND MAINTENANCE OF EROSION CONTROL PRACTICES SHALL BE IN ACCORDANCE WITH THE APPLICABLE WISCONSIN DEPARTMENT OF NATURAL RESOURCES (WDNR) TECHNICAL STANDARD.
3. ALL EROSION CONTROL FACILITIES SHALL BE MAINTAINED THROUGHOUT THE DURATION OF THE PROJECT AND WARRANTY PERIOD IN CONFORMANCE WITH THE DNR WPDES GENERAL PERMIT.
4. ALL DISTURBED GROUND LEFT INACTIVE FOR THIRTY DAYS OR MORE SHALL BE STABILIZED WITH TOPSOIL, SEED, AND MULCH IN ACCORDANCE WITH THE WDNR TECHNICAL STANDARDS 1059 AND 1058.
5. TEMPORARY SEED MIXTURE SHALL CONFORM TO 630.2.1.5.1.4 OF THE WISDOT STANDARD SPECIFICATIONS. USE WINTER WHEAT OR RYE FOR FALL PLANTINGS STARED AFTER SEPTEMBER 1.
6. DISTURBED AREAS THAT CANNOT BE STABILIZED WITH A DENSE GROWTH OF VEGETATION BY SEEDING AND MULCHING DUE TO TEMPERATURE OR TIMING OF CONSTRUCTION, SHALL BE STABILIZED BY APPLYING ANIONIC POLYACRYLAMIDE (PAM) IN ACCORDANCE WITH WDNR TECHNICAL STANDARD 1050.
7. SEDIMENT SHALL BE REMOVED FROM THE SEDIMENT BASINS TO MAINTAIN A THREE FOOT DEPTH OF TREATMENT, MEASURED BELOW THE NORMAL WATER ELEVATION. SEDIMENT WILL BE REMOVED FROM THE DIVERSION DITCHES WHEN IT REACHES HALF THE HEIGHT OF THE DITCH. SEDIMENT WILL BE REMOVED FROM BEHIND THE SILT FENCE AND DITCH CHECKS WHEN IT REACHES HALF THE HEIGHT OR THE FENCE/BALE. THE SILT FENCE AND DITCH CHECKS SHALL BE REPAIRED AS NECESSARY TO MAINTAIN A BARRIER.
8. ALL WATER FROM CONSTRUCTION DEWATERING SHALL BE TREATED IN ACCORDANCE WITH WDNR TECHNICAL STANDARD 1061 PRIOR TO DISCHARGE TO WATERS OF THE STATE, WETLANDS, OR OFFSITE.
9. THE CONTRACTOR IS RESPONSIBLE FOR INSTALLATION OF ANY ADDITIONAL EROSION CONTROL MEASURES NECESSARY TO PREVENT EROSION AND SEDIMENTATION. ALL DISTURBED AREAS ARE TO DRAIN TO APPROVED SEDIMENT CONTROL MEASURES AT ALL TIMES DURING SITE DEVELOPMENT UNTIL FINAL STABILIZATION IS ACHIEVED. DEPENDING ON HOW THE CONTRACTOR GRADES THE SITE, IT MAY BE NECESSARY TO INSTALL TEMPORARY SEDIMENT TRAPS IN VARIOUS LOCATIONS THROUGHOUT THE PROJECT. TEMPORARY SEDIMENT TRAPS SHALL BE DESIGNED, INSTALLED, AND MAINTAINED IN ACCORDANCE WITH WDNR TECHNICAL STANDARD 1063.
10. ANY SEDIMENT TRACKED ONTO A PUBLIC OR PRIVATE ROAD SHOULD BE REMOVED BY STREET CLEANING, NOT FLUSHING, BEFORE THE END OF EACH WORKING DAY.
11. DUST CONTROL SHALL BE PROVIDED AS NECESSARY IN ACCORDANCE WITH WDNR TECHNICAL STANDARD 1068.
12. FINAL STABILIZATION OF LANDSCAPED AREAS SHALL BE IN ACCORDANCE WITH THE APPROVED LANDSCAPE PLAN.
13. ALL SEEDED AREAS WILL BE FERTILIZED, RESEEDED AS NECESSARY, AND MULCHED ACCORDING TO SPECIFICATIONS IN THE APPROVED LANDSCAPE PLAN TO MAINTAIN A VIGOROUS DENSE VEGETATIVE COVER.
14. THE PERMANENT SEED MIXTURE FOR RIHT–OF–WAY AND LOTS SHALL BE WISDOT SEED MIXTURE NO. 40 AND SOWN AT A RATE OF 4LBS/100 SQ. FT. SEED MIXTURE NO. 40 CONSISTS OF 35% KENTUCKY BLUEGRASS, 20% RED FESCUE, 20% HARD FESCUE AND 25% IMPROVED FINE PERENNIAL RYEGRASS.
15. APPROVED EROSION CONTROL PLAN SHALL BE KEPT ON SITE AT ALL TIMES.

C. GRADING

1. THE PROPOSED IMPROVEMENTS SHALL BE CONSTRUCTED ACCORDING TO THE WISCONSIN D.O.T. STANDARD SPECIFICATIONS FOR HIGHWAY AND STRUCTURE CONSTRUCTION, LATEST EDITION AND THE CITY OF LAKE GENEVA STANDARDS AND SPECIFICATIONS.
2. THE CONTRACTOR SHALL MAINTAIN SITE DRAINAGE THROUGHOUT CONSTRUCTION. THIS MAY INCLUDE THE EXCAVATION OF TEMPORARY DITCHES OR PUMPING TO ALLEVIATE WATER PONDING.
3. SILT FENCE AND OTHER EROSION CONTROL FACILITIES MUST BE INSTALLED PRIOR TO CONSTRUCTION OR ANY OTHER LAND DISTURBING ACTIVITY. THE CONTRACTOR SHALL BE RESPONSIBLE FOR REMOVING ALL EROSION CONTROL FACILITIES ONCE THE THREAT OF EROSION HAS PASSED WITH THE APPROVAL OF THE GOVERNING AGENCY.
4. THE CONTRACTOR SHALL ASSUME SOLE RESPONSIBILITY FOR THE COMPUTATIONS OF ALL GRADING AND FOR ACTUAL LAND BALANCE, INCLUDING UTILITY TRENCH SPOIL. THE CONTRACTOR SHALL IMPORT OR EXPORT MATERIAL AS NECESSARY TO COMPLETE THE PROJECT. HOWEVER, ADDITIONAL CUT MATERIAL MAY BE MINED FROM THE POND AREA AND EXCESS FILL MATERIAL MAY BE DEPOSITED ONSITE AT LOCATIONS APPROVED BY THE OWNER.
5. GRADING SHALL CONSIST OF CLEARING AND GRUBBING EXISTING VEGETATION, STRIPPING TOPSOIL, REMOVAL OF EXISTING PAVEMENT OR FOUNDATIONS, IMPORTING OR EXPORTING MATERIAL TO ACHIEVE AN ON–SITE EARTHWORK BALANCE, GRADING THE PROPOSED BUILDING PADS AND PAVEMENT AREAS, SCARIFYING AND FINAL COMPACTION OF THE PAVEMENT SUBGRADE, AND PLACEMENT OF TOPSOIL.
6. NO FILL SHALL BE PLACED ON WET OR SOFT SUBGRADE. THE SUBGRADE SHALL BE PROOF–ROLLED AND INSPECTED BY THE GEOTECHNICAL ENGINEER BEFORE AND MATERIAL IS PLACED.
7. ALL FILL SHALL BE CONSIDERED STRUCTURAL FILL AND SHALL BE PLACED IN ACCORDANCE WITH THE GEOTECHNICAL REPORT.
8. RETENTION PONDS SHALL BE SEEDED WITH WET PRAIRIE MIX. SEE CITY'S PRAIRIE MIX ESTABLISHMENT SPECIFICATIONS. CONTRACTOR SHALL SUBMIT PRAIRIE SEED MIX TO TOM ZAGAR, CITY FORESTER (262–679–5617), FOR REVIEW AND APPROVAL PRIOR TO COMMENCING WORK. CONTRACTOR SHALL PLANT PRAIRIE SEED MIX IMMEDIATELY AFTER FINE GRADING AT ALL LOCATIONS WHERE PRAIRIE SEED MIX WILL BE PLANTED.
9. NO TEMPORARY SEED MIX SHALL BE INSTALLED AT LOCATIONS WHERE PRAIRIE SEED MIX WILL BE PLANTED.

LEGEND

EXISTING		PROPOSED
	CITY–VILLAGE LIMITS	
	BENCHMARK	
	CHISELED CROSS	
	CONTROL POINT	
	FOUND 5/8" IRON BAR	
	FOUND 1" IRON PIPE	
	MONUMENT – CONCRETE W/ BRASS CAP	
PK	PK NAIL – FOUND SPIKE	
(XX)	RECORD AS	
	SET 5/8"x18" IRON 1.13#/L.F.	
	SET IRON PIPE	
	WITNESS MONUMENT	
	TREELINE	
	BUSH	
	TREE – CONIFEROUS	
	TREE – DECIDUOUS	
	TREE– GENERAL	
	FLOODPLAIN LINE	
	WETLAND BOUNDARY	
	WETLAND SYMBOL	
	SOIL BORING	
TP	TEST PIT	
	ROAD CENTER LINE	
	DITCH CENTER LINE	
X	FENCE – BARBED WIRE	
	FENCE – CHAIN LINK	
	GUARDRAIL	
	RETAINING WALL	
	BOLLARD	
	DETECTABLE WARNING FIELD	
	HANDICAP SYMBOL	
	FLAG POLE	
	MAILBOX	
	SIGN	
STM	STORM SEWER	STM
	MANHOLE – STORM	
	STORM INLET – CURB	
	STORM INLET – BEEHIVE	
	STORM INLET – SQUARE	
	END SECTION	
SAN	SANITARY	SAN
FM	SANITARY FORCE MAIN	FM
	MANHOLE – SANITARY	
	CLEAN OUT	
	SEPTIC TANK COVER	
	SEPTIC VENT	
W	WATER MAIN	W
	MANHOLE – WATER MAIN	
	CURB STOP	
	HYDRANT	
	WATER MAIN VALVE	
	WELL	
	WATER MAIN BACK FLOW PREVENTER	
G	GAS LINE	G
	MANHOLE – GAS	
	GAS VALVE	
G	GAS LINE MARKER	
E	ELECTRIC	E
	MANHOLE – ELECTRIC	
	ELECTRICAL TRANSFORMER	
	POWER POLE	
	GUY WIRE	
	LIGHT POLE	
	PULL BOX	
OHW	OVERHEAD UTILITY	OHW
	UTILITY PEDESTAL	
CATV	CABLE TELEVISION	CATV
TV	CABLE TV BOX	
T	TELEPHONE	T
	TELEPHONE PEDESTAL	
FO	FIBER OPTIC	FO
	MANHOLE	
	CONSTRUCTION LIMITS	
	INLET PROTECTION	
	SILT FENCE	SF

CONSTRUCTION SEQUENCE

1. INSTALL SILT FENCE AT THE LOCATIONS NOTED ON THE PLANS. THIS MUST BE DONE BEFORE ANY GRADING ACTIVITIES TAKE PLACE.
2. TOPSOIL IS TO BE STRIPPED AND STOCKPILED. THE STOCKPILE IS TO BE PROTECTED WITH SILT FENCE WITHIN 7 DAYS AND SEEDED WITHIN 30 DAYS OF LAYUP.
3. ROUGH GRADING MAY TAKE PLACE AFTER TOPSOIL STRIPPING.
4. PERMANENT SEEDING TO BE COMPLETED BY OCTOBER 15TH OF THE YEAR GRADING WORK IS COMPLETED OR BY JUNE 1ST OF THE FOLLOWING YEAR.

MEMBER ONE CALL SYSTEMS INTERNATIONAL

TO OBTAIN LOCATION OF PARTICIPANTS UNDERGROUND FACILITIES BEFORE YOU DIG IN WISCONSIN
CALL DIGGERS HOTLINE
TOLL FREE
800–242–8511
(414-259-1181 MILWAUKEE METRO)
(TDD: 800-542-2289)
www.diggershotline.com

WIS. STATUTE 182.0175 (1974) REQUIRES MIN. OF 3 WORK DAYS NOTICE BEFORE YOU EXCAVATE.

SITE IMPROVEMENTS FOR
COVENANT HARBOR BIBLE CAMP
LAKE GENEVA, WI

LYNCH & ASSOCIATES
ENGINEERING CONSULTANTS, LLC

GENERAL NOTES

NO.	REVISIONS	BY	DATE
1	PLAN UPDATES PER ENGINEERS COMMENTS	SB	01/07/22

ISSUED FOR REVIEW

PLAN DATE 11.16.21
DESIGNED BY NJO

0 NTS
SCALE

PROJECT NO.
21-0048

SHEET NO.
C001

SITE IMPROVEMENT PLANS FOR

COVENANT HARBOR BIBLE CAMP

LAKE GENEVA, WI

LYNCH & ASSOCIATES
ENGINEERING CONSULTANTS, LLC

EX. CONDITIONS

REVISIONS

NO.		BY	DATE
1	PLAN UPDATES PER ENGINEERS COMMENTS	SB	01/07/22

ISSUED FOR REVIEW

PLAN DATE 11.16.21
DESIGNED BY NJO

0 10'
SCALE

PROJECT NO.
21.0048

SHEET NO.
C100

FILENAME: P:\shared\1 – Projects\2021\21.0048 – Covenant Harbor Bible Camp – Covenant Harbor – Twins\CAD\Sheets\21.0048 EX.CONDITIONS.dwg

PLOT DATE: 1/7/2022 3:13 PM

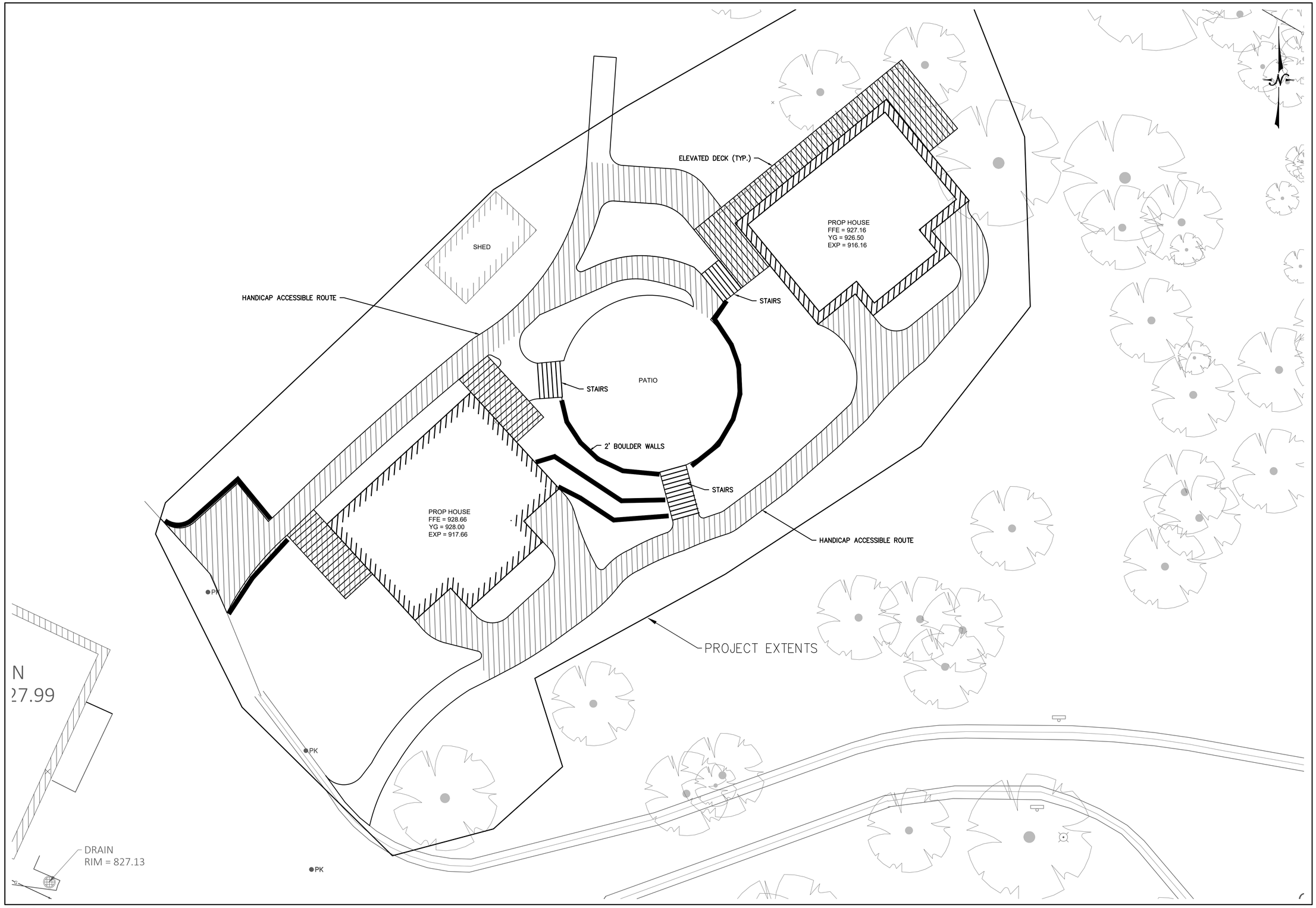

SITE IMPROVEMENT PLANS FOR

COVENANT HARBOR BIBLE CAMP

LAKE GENEVA, WI

LYNCH & ASSOCIATES
ENGINEERING CONSULTANTS, LLC

SITE PLAN

NO.	REVISIONS	BY	DATE
1	PLAN UPDATES PER ENGINEERS COMMENTS	SB	01/07/22

ISSUED FOR REVIEW

PLAN DATE 11.16.21

DESIGNED BY NJO

0 10'
SCALE

PROJECT NO.
21.0048

SHEET NO.
C101

FILENAME: P:\shared\1 - Projects\2021\21.0048 - Covenant Harbor Bible Camp - Covenant Harbor - Twins\CAD\Sheets\21.0048 SP.dwg

PLOT DATE: 1/7/2022 3:13 PM

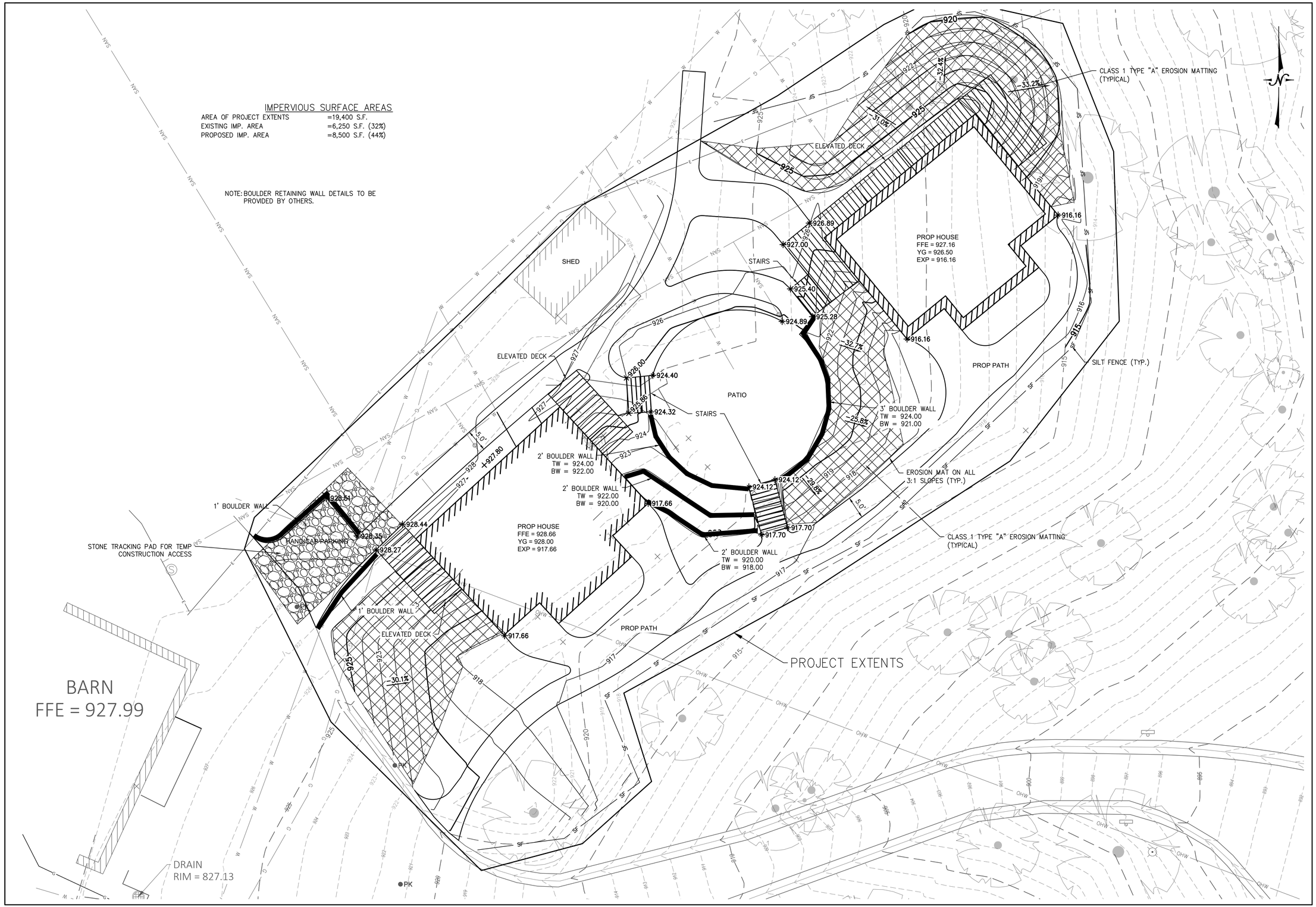

SITE IMPROVEMENT PLANS FOR
COVENANT HARBOR BIBLE CAMP
LAKE GENEVA, WI

LYNCH & ASSOCIATES
ENGINEERING CONSULTANTS, LLC

GRADING & EROSION CONTROL PLAN

NO.	REVISIONS	BY	DATE
1	PLAN UPDATES PER ENGINEERS COMMENTS	SB	01/07/22

ISSUED FOR REVIEW

PLAN DATE 11.16.21
DESIGNED BY NJO

0 10'
SCALE

PROJECT NO.
21.0048

SHEET NO.
C102

FILENAME: P:\shared\1 - Projects\2021\21.0048 - Covenant Harbor Bible Camp - Covenant Harbor - Twins\CAD\Sheets\21.0048 GP.dwg

PLOT DATE: 1/7/2022 3:13 PM

NOTE: THE INVERT ELEVATIONS OF EXISTING UTILITIES ARE TO BE SURVEYED AND ADDED TO THIS PLAN SHEET EARLY IN THE WEEK OF 1/10/2022

ABANDON EX WATER LATERAL AT MAIN

EX SAN CLEANOUT

PROP SAN LATERAL

EXTEND EX WATER LATERAL TO CONNECT TO PROP HOUSE

ABANDON EX SAN LATERAL AT MAIN

PROP HOUSE
FFE = 927.16
YG = 926.50
EXP = 916.16

SHED

EX 4" SANITARY MAIN

EX 4" SANITARY MAIN

PATIO

EXTEND EX SAN LATERAL TO CONNECT TO PROP HOUSE

EXTEND EX WATER LATERAL TO CONNECT TO PROP HOUSE

EX SAN CLEANOUT

REMOVE EX WATER LATERAL

PROP HOUSE
FFE = 928.66
YG = 928.00
EXP = 917.66

BARN
FFE = 927.99

DRAIN
RIM = 827.13

SITE IMPROVEMENT PLANS FOR
COVENANT HARBOR BIBLE CAMP
LAKE GENEVA, WI

LYNCH & ASSOCIATES
ENGINEERING CONSULTANTS, LLC

UTILITY PLAN

NO.	REVISIONS	BY	DATE
1	PLAN UPDATES PER ENGINEERS COMMENTS	SB	01/07/22

ISSUED FOR REVIEW

PLAN DATE 11.16.21
DESIGNED BY NJO

0 10'
SCALE

PROJECT NO.
21.0048

SHEET NO.
C103

FILENAME: P:\shared\1 - Projects\2021\21.0048 - Covenant Harbor Bible Camp - Covenant Harbor - Twins\CAD\Sheets\21.0048 UP.dwg

PLOT DATE: 1/7/2022 3:13 PM

This drawing based on Wisconsin Department of Transportation Standard Detail Drawing 8 E 9-6.

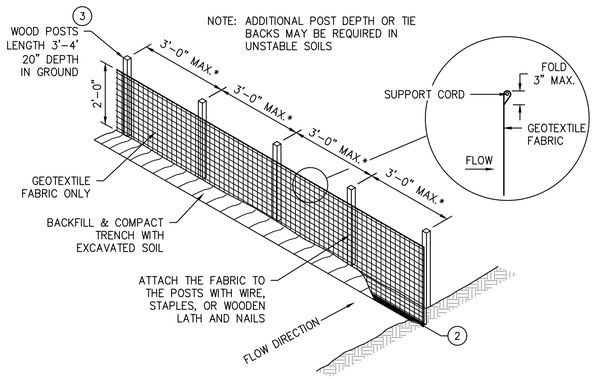

NOTE: ADDITIONAL POST DEPTH OR TIE BACKS MAY BE REQUIRED IN UNSTABLE SOILS

NOTE: 8'-0" POST SPACING ALLOWED IF A WOVEN GEOTEXTILE FABRIC IS USED.

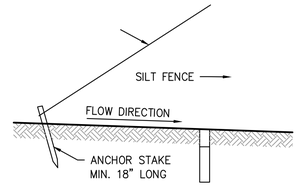

SILT FENCE TIE BACK
(WHEN ADDITIONAL SUPPORT REQUIRED)

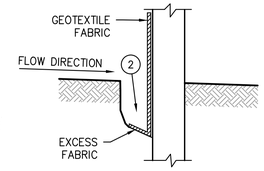

TRENCH DETAIL

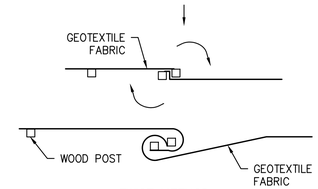

TWIST METHOD

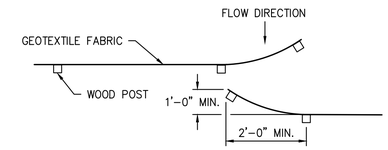

HOOK METHOD

JOINING TWO LENGTHS OF SILT FENCE

GENERAL NOTES:

1. HORIZONTAL BRACE REQUIRED WITH 2" x 4" WOODEN FRAME OR EQUIVALENT AT TOP OF POSTS.
2. TRENCH SHALL BE A MINIMUM OF 4" WIDE AND 6" DEEP TO BURY AND ANCHOR THE GEOTEXTILE FABRIC. FOLD MATERIAL TO FIT TRENCH AND BACKFILL AND COMPACT TRENCH WITH EXCAVATED SOIL.
3. WOOD POSTS SHALL BE A MINIMUM SIZE OF 1-1/8" x 1-1/8" OF OAK OR HICKORY.
4. SILT FENCE TO EXTEND ACROSS THE TOP OF THE PIPE.
5. CONSTRUCT SILT FENCE FROM A CONTINUOUS ROLL IF POSSIBLE BY CUTTING LENGTHS TO AVOID JOINTS. IF A JOINT IS NECESSARY USE ONE OF THE FOLLOWING TWO METHODS:
   A) OVERLAP THE END POSTS AND TWIST, OR ROTATE, AT LEAST 180°
   B) HOOK THE END OF EACH SILT FENCE LENGTH.
6. SILT FENCE SHALL BE INSTALLED USING CURRENT WisDOT STANDARDS AT THE TIME OF CONSTRUCTION.

SILT FENCE

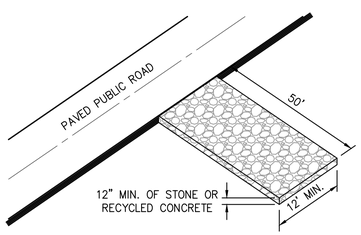

NOTE:
PLACE WISDOT TYPE R GEOTEXTILE FABRIC UNDER STONE, IF SATURATED CONDITIONS ARE EXPECTED.

STONE GRADATION

SIEVE SIZE	PERCENT BY WEIGHT PASSING
3"	100
2 1/2"	90-100
1 1/2"	25-60
3/4"	0-20
3/8"	0-5

ALTERNATE - MEET GRADATION FOR WISDOT SELECT CRUSHED MATERIAL, SECTION 312 OF STANDARD SPECIFICATIONS FOR ROAD AND STRUCTURE CONSTRUCTION.

STONE TRACKING PAD

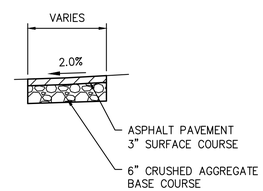

ASPHALT TRAIL

SITE IMPROVEMENT PLANS FOR
COVENANT HARBOR BIBLE CAMP
LAKE GENEVA, WI

LYNCH & ASSOCIATES
ENGINEERING CONSULTANTS, LLC

CONSTRUCTION DETAILS

NO.	REVISIONS	BY	DATE
1	PLAN UPDATES PER ENGINEERS COMMENTS	SB	01/07/22

ISSUED FOR REVIEW

PLAN DATE 11.16.21
DESIGNED BY NJO

0 NTS
SCALE

PROJECT NO.
21.0048

SHEET NO.
C500

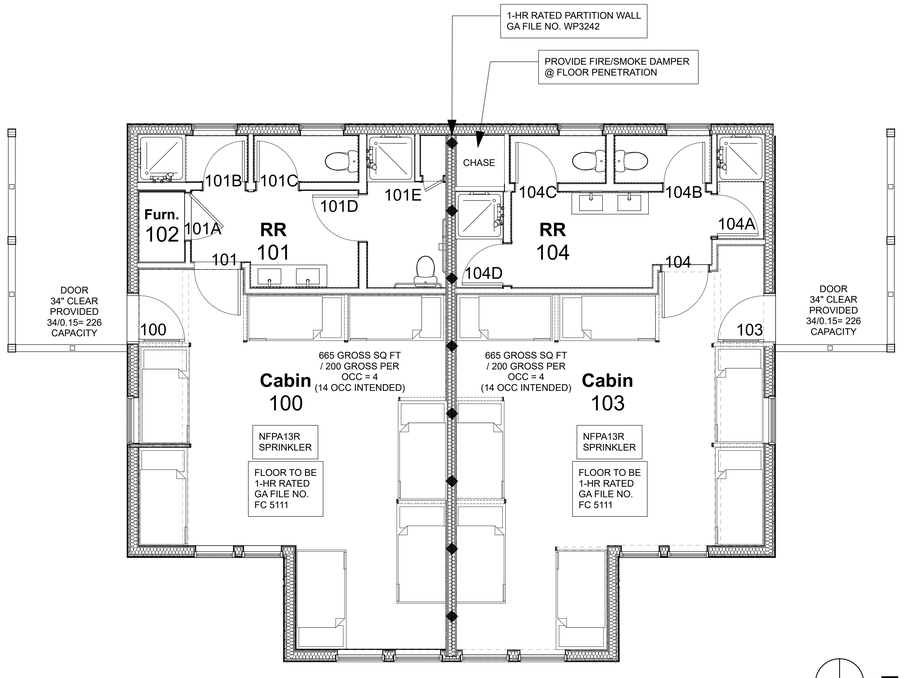

1
A0.1

MAIN LEVEL CODE PLAN

SCALE: 1/4" = 1'-0"

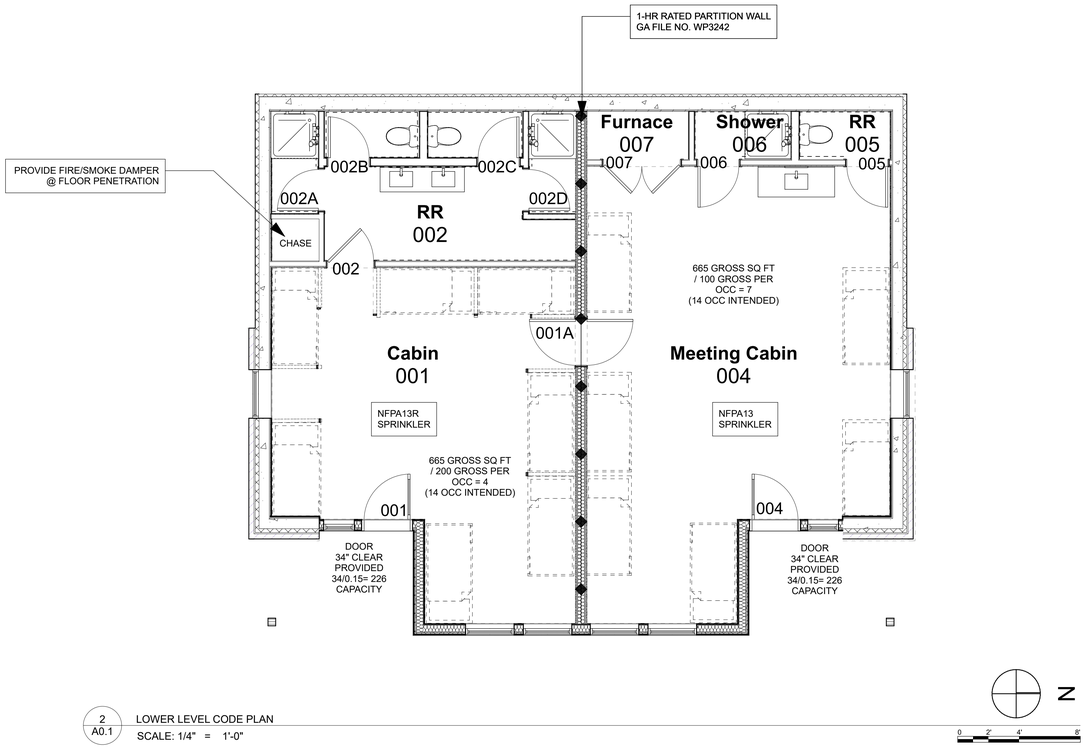

2
A0.1

LOWER LEVEL CODE PLAN

SCALE: 1/4" = 1'-0"

CODE REVIEW SUMMARY

WI BUILDING CODE 2015

CH. 3 **DESCRIPTION OF OCCUPANCY:**
NON-SEPARATED MIXED USE R1 & B

CH. 6 **TYPE OF CONSTRUCTION:**
VB: NFPA13R SPRINKLED @ SLEEPING ROOMS
NFPA13 @ MEETING ROOM

T601 **FIRE RESISTANCE RATING REQUIREMENTS**	**REQUIRED**	**PROVIDED**
STRUCTURAL FRAME (COLUMNS, GIRDERS, TRUSSES)	0 HR	0 HR
BEARING WALLS - EXTERIOR	0 HR	0 HR
BEARING WALLS - INTERIOR	0 HR	0 HR
NONBEARING WALLS - EXTERIOR	0 HR	0 HR
NONBEARING WALLS - INTERIOR	0 HR	0 HR
FLOOR CONSTRUCTION (INCLUDING SUPPORTING BEAMS & JOISTS	0 HR	1 HR
ROOF CONSTRUCTION (INCLUDING SUPPORTING BEAMS & JOISTS	0 HR	0 HR

T602 **FIRE RESISTANCE RATING REQ. FOR EXTERIOR WALLS BASED ON FIRE SEPARATION DISTANCE**
FIRE SEPARATION DISTANCE: >30' REQUIRED SEPARATION: 0 HR

ALLOWABLE HEIGHT AND BUILDING AREAS

T504.4	ALLOWABLE HEIGHT	3 STORIES, 60 FT
	PROPOSED HEIGHT	**32'7" FT**
T506.2	ALLOWABLE AREA PER FLOOR	**7,000 SF**
	PROPOSED/EXISTING AREA	
	MAIN LEVEL	1,330 SF
	LOWER LEVEL	1,330 SF
		2,660 SF TOTAL

PLUMBING REVIEW SUMMARY

WI BUILDING CODE 2015 SECTION 2902

MINIMUM NUMBER OF PLUMBING FIXTURES
TOTAL OCCUPANCY: 56 OCC.

	REQUIRED	PROVIDED
WATER CLOSETS (1 PER UNIT)	4	7
LAVATORIES (1 PER UNIT)	4	7
SHOWER/TUB (1 PER UNIT)	4	7
DRINKING FOUNTAIN (NOT REQUIRED)	0	0
SERVICE SINK (HOT WATER BIB UNDER SINK)	1	4

NOT FOR CONSTRUCTION

STATION 19 ARCHITECTS, INC.

STATION19.COM | 612.623.1800

I hereby certify that this plan, specification, or report was prepared by me or under my direct supervision and that I am a duly Licensed Architect under the laws of the state of STATE.

SIGNATURE: THOMAS PETERSON

REGISTRATION #:

COVENANT HARBOR CAMP CABINS

1724 WEST MAIN STREET, LAKE GENEVA, WI 53147

PROJECT NO:	5142
DRAWN BY:	DT
COPYRIGHT:	2022

Errors may occur in the transmission of electronic files. Station Nineteen Architects, Inc. is not responsible for any claims, damages or expenses arising out of the unauthorized use of the information contained in electronic files. It is the responsibility of the user to verify all layouts, dimensions and other related information. This document may not be used or copied without prior consent.

NO	DATE	DESCRIPTION

CONSTRUCTION DOCUMENTS

CODE PLAN

A0.1

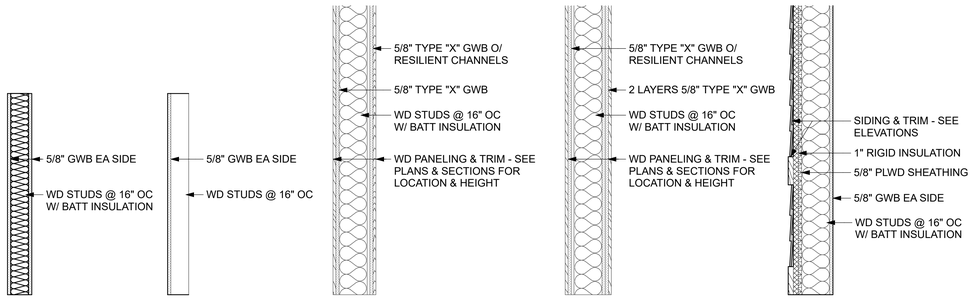

1A 2x4 WD STUD
1B 2x6 WD STUD

2A 2x4 WD STUD

3 2x6 WD STUD FIRE BARRIER

4 2x6 WD STUD FIRE BARRIER

5 2x6 W/ SIDING
5A 1/2" PLYWOOD @ INTERIOR

1 / A3.1 EAST/WEST WALL SECTION
SCALE: 1' = 1'-0"

GENERAL PLAN NOTES

A. ALL WALLS TO BE WOOD STUDS, INSULATE AND RUN TO BOTTOM OF DECK OR STRUCTURE UNLESS OTHERWISE NOTED.
B. INTERIOR WALLS TO BE TYPE 1A UNLESS OTHERWISE NOTED.
B. ALL EXTERIOR WINDOWS TO BE VINYL.
C. ALL INTERIOR DOORS TO BE PRE-HUNG WOOD FRAMES WITH WOOD DOORS UNLESS NOTED OTHERWISE.
D. SEE SITE PLAN FOR PAVING, SIDEWALKS, PARKING ETC.

SPECIFIC PLAN NOTES

1. CONCRETE STOOP - SEE STRUCT
2. WOOD POST WRAPPED IN 1" TRIM W/ 2'x2' CONCRETE FOOTING - SEE STRUCT
3. CONCRETE PATIO - SEE CIVIL
4. STAINED BROWN TREATED WOOD POST SET IN CONCRETE FOOTINGS - SEE STRUCT
5. COMPOSITE DECK W/ COMPOSITE RAILING
6. 2x WD FRAMED & BOX CAR SIDING BUNK WALLS BY OWNER
7. FLOORING TO BE CARPET
8. WALLS TO HAVE BOX CAR SIDING TO 7'-5 5/8" W/ 1x6 TRIM ABOVE
9. FLOORING TO BE CERAMIC TILE
10. WALLS TO HAVE CERAMIC TILE TO 4'-0"
11. CEILING TO HAVE 1x4 T&G BOARDS
12. CEILING TO BE PAINTED GWB
13. 5/8" GWB CEILING ON 2x FRAMING @ 13'-0" AFF

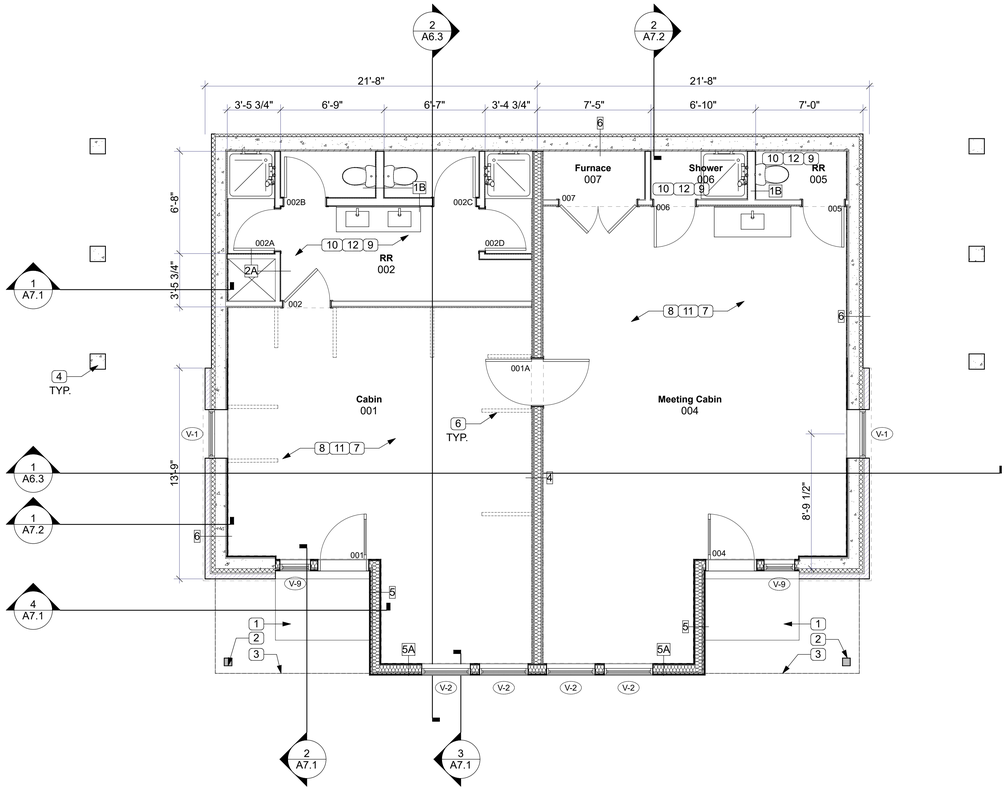

1 / A3.1 LOWER LEVEL PLAN
SCALE: 1/4" = 1'-0"

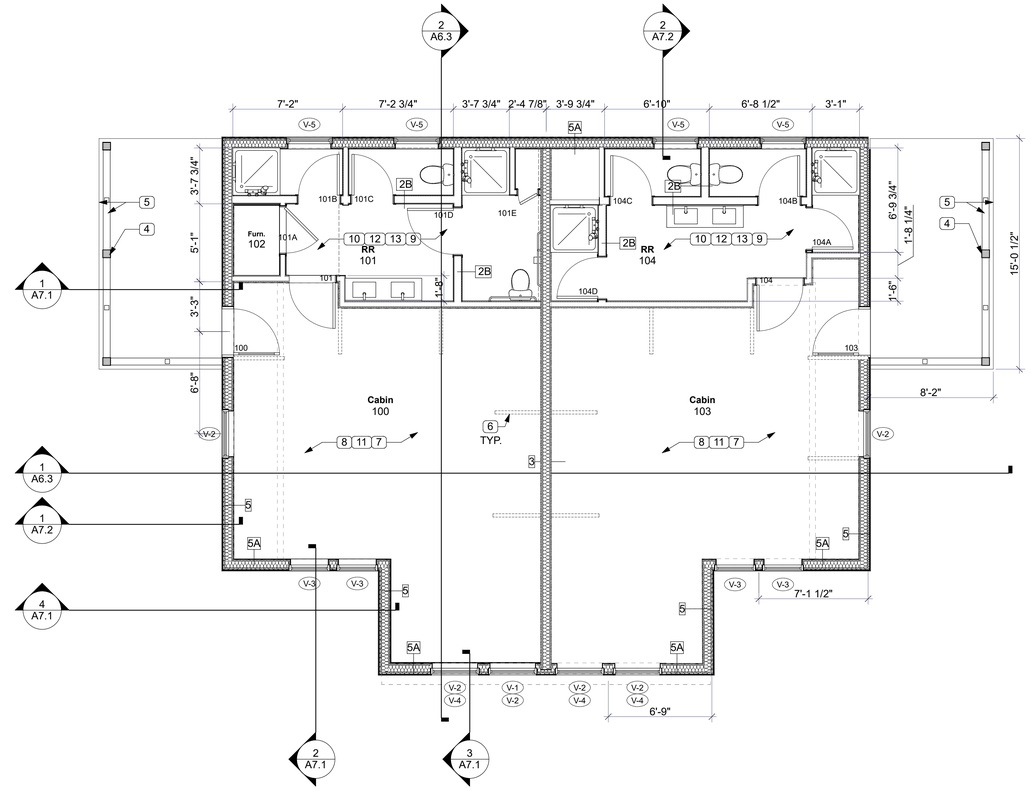

2 / A3.1 MAIN LEVEL PLAN
SCALE: 1/4" = 1'-0"

NOT FOR CONSTRUCTION

STATION 19 ARCHITECTS, INC.

STATION19.COM | 612.623.1800

I hereby certify that this plan, specification, or report was prepared by me or under my direct supervision and that I am a duly Licensed Architect under the laws of the state of STATE.

SIGNATURE: THOMAS PETERSON

REGISTRATION #:

COVENANT HARBOR CAMP CABINS

1724 WEST MAIN STREET, LAKE GENEVA, WI 53147

PROJECT NO: 5142

DRAWN BY: DT

COPYRIGHT: 2022

Errors may occur in the transmission of electronic files. Station Nineteen Architects, Inc. is not responsible for any claims, damages or expenses arising out of the unauthorized use of the information contained in electronic files. It is the responsibility of the user to verify all layouts, dimensions and other related information. This document may not be used or copied without prior consent.

NO	DATE	DESCRIPTION

CONSTRUCTION DOCUMENTS

FLOOR PLANS

A3.1

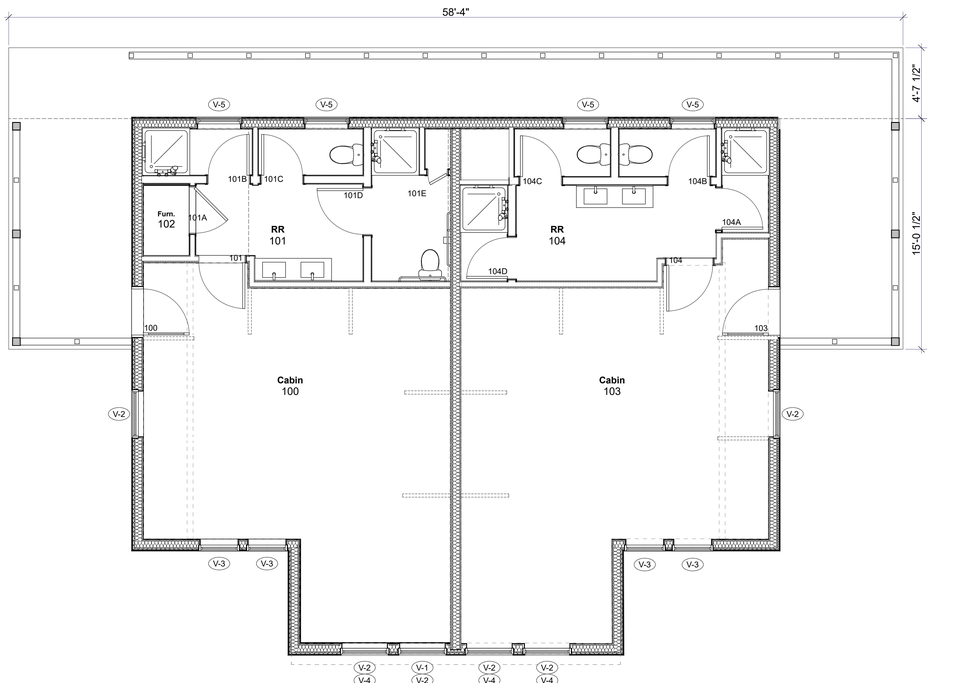

1
A3.2

NORTH CABIN PLAN

SCALE: 1/4" = 1'-0"

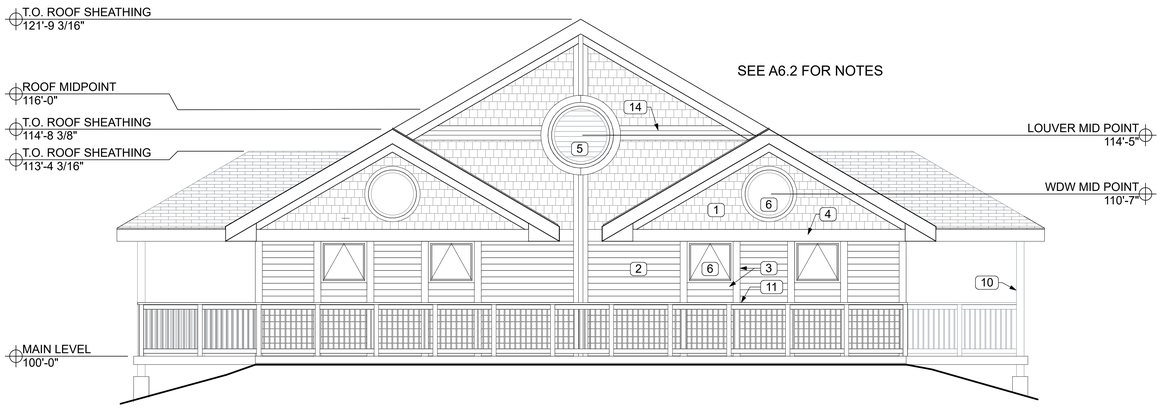

2
A3.2

WEST ELEVATION - NORTH CABIN

SCALE: 1/4" = 1'-0"

STATION 19 ARCHITECTS, INC.

STATION19.COM | 612.623.1800

NOT FOR CONSTRUCTION

I hereby certify that this plan, specification, or report was prepared by me or under my direct supervision and that I am a duly Licensed Architect under the laws of the state of STATE.

SIGNATURE: THOMAS PETERSON

REGISTRATION #:

COVENANT HARBOR CAMP CABINS

1724 WEST MAIN STREET, LAKE GENEVA, WI 53147

PROJECT NO:	5142
DRAWN BY:	DT
COPYRIGHT:	2022

Errors may occur in the transmission of electronic files. Station Nineteen Architects, Inc. is not responsible for any claims, damages or expenses arising out of the unauthorized use of the information contained in electronic files. It is the responsibility of the user to verify all layouts, dimensions and other related information. This document may not be used or copied without prior consent.

NO	DATE	DESCRIPTION

CONSTRUCTION DOCUMENTS

FLOOR PLAN & ELEVATION - NORTH CABIN

A3.2